iPOS80x0 BX-CAN / CAT

Intelligent Servo Drive for Step, DC, Brushless DC and AC Motors

T E C H N O S O F T

Intelligent Servo Drives

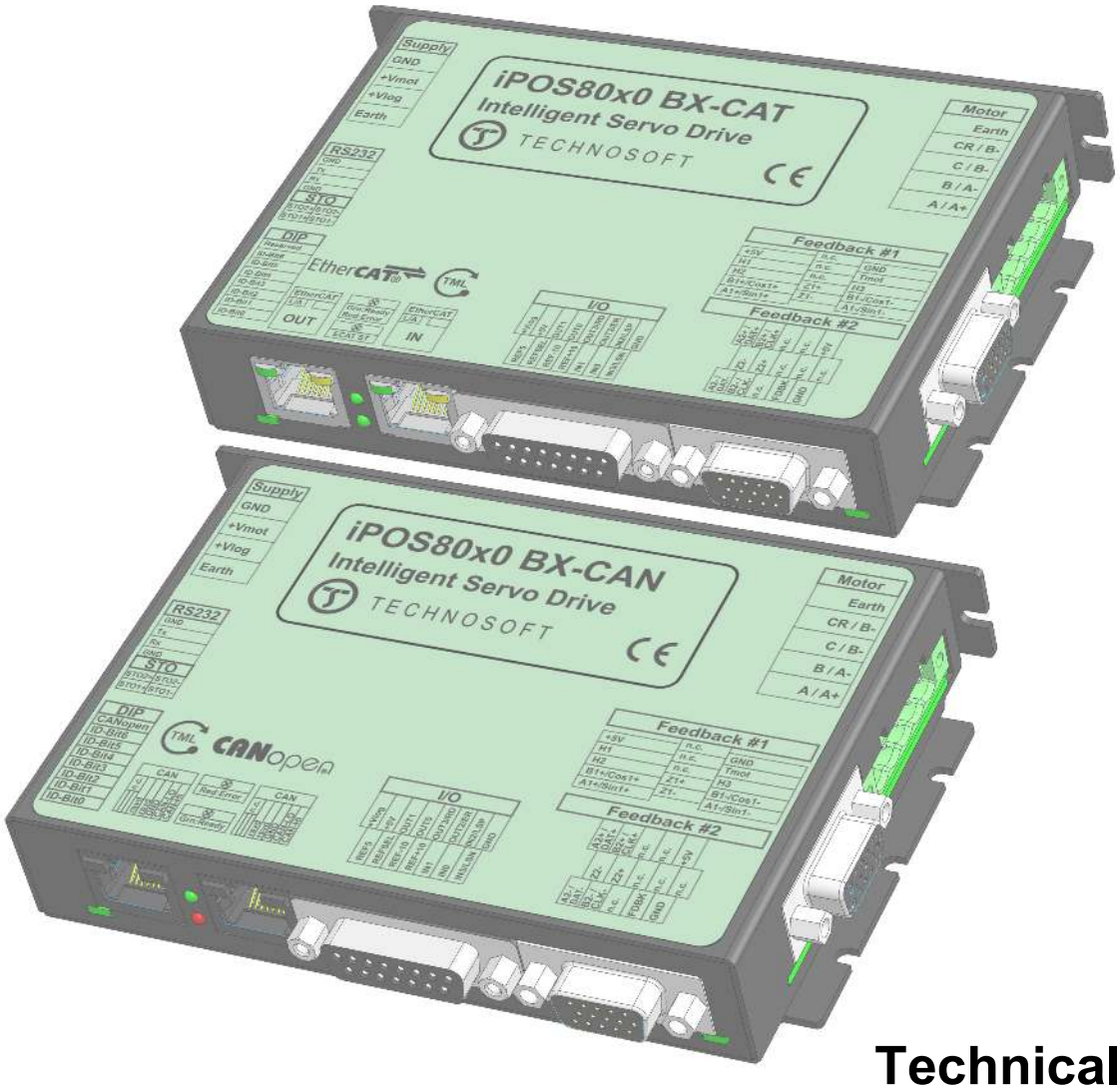

Technical Reference

© Technosoft 2020

P091.029.iPOS80x0.BX.UM.0520

Table of contents

Table of contents 2

Read This First 4

About This Manual 4

Notational Conventions 4

Trademarks 4

Related Documentation 5

If you Need Assistance … 6

1 Safety information 6

1.1 Warnings 6

1.2 Cautions 7

1.3 Quality system, conformance and certifications 7

2 Product Overview 8

2.1 Introduction 8

2.2 Product Features 9

2.3 Identification Labels 11

2.4 Supported Motor-Sensor Configurations 11

2.4.1 ..... Single loop configurations 11

2.4.2 ..... Dual loop configurations 12

3 Hardware Installation 12

3.1 iPOS80x0 BX-CAN/CAT Board Dimensions 12

3.2 Mechanical Mounting 13

3.3 Connectors and Pinouts 13

3.3.1 ..... Pinouts for iPOS80x0 BX-CAN 13

3.3.2 ..... Mating Connectors for CAN and CAT 14

3.3.3 ..... Pinouts for iPOS80x0 BX-CAT 14

3.4 Connection diagrams 15

3.4.1 ..... iPOS80x0 BX-CAN connection diagram 15

3.4.2 ..... iPOS80x0 BX-CAT connection diagram 16

3.4.3 ..... 24V Digital I/O Connection 17

3.4.3.1 PNP inputs 17

3.4.3.2 NPN inputs 17

3.4.3.3 NPN outputs 18

3.4.4 ..... Analog Inputs Connection 19

3.4.4.1 0-5V Input Range 19

3.4.4.2 +/- 10V Input Range 19

3.4.4.3 Recommendation for wiring 19

3.4.5 ..... Motor connections 20

3.4.5.1 Brushless Motor connection 20

3.4.5.2 2-phase Step Motor connection 20

3.4.5.3 3-Phase Step Motor connection 21

3.4.5.4 DC Motor connection 21

3.4.5.5 Recommendations for motor wiring 21

3.4.6 ..... Feedback connections 22

3.4.6.1 Differential Incremental Encoder #1 Connection 22
3.4.6.2 Differential Incremental Encoder #2 Connection 22
3.4.6.3 Pulse and direction connection 23
3.4.6.4 Sine-Cosine Analog Encoder Connection 24
3.4.6.5 Digital Hall Connection for Motor + Hall + Incremental Encoder 24
3.4.6.6 SSI Encoder #2 Connection 25
3.4.6.7 BiSS Encoder #2 Connection 25
3.4.7 ..... Power Supply and STO Connection 26
3.4.7.1 Supply Connection 26
3.4.7.2 Recommendations for Supply Wiring 26
3.4.7.3 Recommendations to limit over-voltage during braking 26
3.4.8 ..... Serial RS-232 connection 28
3.4.8.1 Serial RS-232 connection 28
3.4.8.2 Recommendation for wiring 28
3.4.9 ..... CAN-bus connection (for CAN drives only) 29
3.4.9.1 CAN connection 29
3.4.9.2 Recommendation for wiring 29
3.4.10 ..... Recommendations for EtherCAT Wiring (for CAT drives) 30
3.4.11 ..... Disabling Autorun (for CAN drives); Disabling the setup table at startup (for CAT drives) 31
3.4.11.1 Disabling Autorun (for CAN drives) 31
3.4.11.2 Disabling the setup table at startup (for CAT drives) 31
3.5 CAN Operation Mode and Axis ID Selection for CAN drives(SW1 settings) 32
3.6 Axis ID Selection for CAT drives(J1 pin settings) 32
3.7 LED indicators 33
3.7.1 ..... LEDs for CAN drives 33
3.7.2 ..... LEDs for CAT drives 33
3.7.2.1 EtherCAT® ST LED indicator 33
3.8 Electrical Specifications 34
3.8.1 ..... Operating Conditions 34
3.8.2 ..... Storage Conditions 34
3.8.3 ..... Mechanical Mounting 34
3.8.4 ..... Environmental Characteristics 34
3.8.5 ..... Logic Supply Input (+V_{LOG}) 35
3.8.6 ..... Motor Supply Input (+V_{MOT}) 35
3.8.7 ..... Motor Outputs (A/A+, B/A-, C/B+, CR/B-) 35
3.8.8 ..... Digital Inputs (IN0, IN1, IN2/LSP, IN3/LSN) 35
3.8.9 ..... Digital Outputs (OUT0, OUT1, OUT2/Error, OUT3/ Ready) 36
3.8.10 ..... Digital Hall Inputs (Hall1, Hall2, Hall3) 36
3.8.11 ..... Encoder #1 Inputs (A1+, A1-, B1+, B1-, Z1+, Z1-,) 36
3.8.12 ..... Encoder #2 Inputs (A2+, A2-, B2+, B2-, Z2+, Z2-) 37
3.8.13 ..... Sin-Cos Encoder Inputs (Sin+, Sin-, Cos+, Cos-) 37
3.8.14 ..... SSI encoder interface 37
3.8.15 ..... BiSS Encoder Interface 38
3.8.16 ..... Analog 0…5V Inputs (REF, FDBK) 38
3.8.17 ..... Analog ±10V Input (REF) 38
3.8.18 ..... RS-232 38
3.8.19 ..... CAN-Bus (for CAN drives) 38
3.8.22 ..... Safe Torque OFF (STO1+; STO1-; STO2+; STO2-) 39
3.8.24 ..... De-rating graphs 40
4 Memory Map 41

Read This First

Whilst Technosoft believes that the information and guidance given in this manual is correct, all parties must rely upon their own skill and judgment when making use of it. Technosoft does not assume any liability to anyone for any loss or damage caused by any error or omission in the work, whether such error or omission is the result of negligence or any other cause. Any and all such liability is disclaimed.

All rights reserved. No part or parts of this document may be reproduced or transmitted in any form or by any means, electrical or mechanical including photocopying, recording or by any information-retrieval system without permission in writing from Technosoft S.A.

The information in this document is subject to change without notice.

About This Manual

This book is a technical reference manual for:

Product Name	Part Number	Description
iPOS8010 BX-CAN	P029.025.E201	CAN version,10A In/ 20A I Peak, STO inputs
iPOS8020 BX-CAN	P029.026.E201	CAN version,20A In/ 40A I Peak, STO inputs
iPOS8010 BX-CAT	P029.025.E221	EtherCAT® version,10A In/ 20A I Peak, STO inputs
iPOS8020 BX-CAT	P029.026.E221	EtherCAT® version,20A In/ 40A I Peak, STO inputs

In order to operate the **iPOS80x0** drives, you need to pass through 3 steps:

- **Step 1 Hardware installation**
- **Step 2 Drive setup** using Technosoft **EasySetUp** software for drive commissioning
- **Step 3 Motion programming** using one of the options:
  - A **CANopen master**[1] or an **EtherCAT® master**[2]
  - The drives **built-in motion controller** executing a Technosoft Motion Language (**TML**) program developed using Technosoft **EasyMotion Studio** software
  - A **TML_LIB motion library for PCs** (Windows or Linux) [3]
  - A **TML_LIB motion library for PLCs** [3]
  - A **distributed control** approach which combines the above options, like for example a host calling motion functions programmed on the drives in TML

This manual covers **Step 1** in detail. It describes the **iPOS80x0** hardware including the technical data, the connectors and the wiring diagrams needed for installation.

For Step 2 and 3, please consult the document ***iPOS Dual Loop drives Software reference (091.027.DL.Software.xxxx)***. It also includes the scaling factors between the real SI units and the drive internal units. For detailed information regarding the next steps, refer to the related documentation.

Notational Conventions

This document uses the following conventions:

- **iPOS80x0**– all products described in this manual
- **IU units** – Internal units of the drive
- **SI units** – International standard units (meter for length, seconds for time, etc.)
- **STO** – Safe Torque Off
- **TML** – Technosoft Motion Language
- **CANopen** – Standard communication protocol that uses 11-bit message identifiers over CAN-bus
- **TMLCAN** – Technosoft communication protocol for exchanging TML commands via CAN-bus, using 29bit message identifiers
- **CoE** – CAN application protocol over EtherCAT®

Trademarks

EtherCAT® is registered trademark and patented technology, licensed by Beckhoff Automation GmbH, Germany.

[1] when the iPOS80x0 BX-CAN is set in CANopen mode

[2] when using and iPOS80x0 BX-CAT

[3] available only for CAN versions

Related Documentation

iPOS8010 BX-CAN Datasheet (P029.025.E201.DSH)

– describes the hardware connections of the iPOS8010 BX CAN family of intelligent servo drives including the technical data and connectors.

iPOS8020 BX-CAN Datasheet (P029.026.E201.DSH)

– describes the hardware connections of the iPOS8020 BX CAN family of intelligent servo drives including the technical data and connectors.

iPOS8010 BX-CAT Datasheet (P029.025.E221.DSH)

– describes the hardware connections of the iPOS8010 BX EtherCAT® family of intelligent servo drives including the technical data and connectors.

iPOS8020 BX-CAT Datasheet (P029.026.E221.DSH)

– describes the hardware connections of the iPOS8020 BX EtherCAT® family of intelligent servo drives including the technical data and connectors.

iPOS family Safe Torque Off (STO) Operating instructions (091.099.STO.Operating.Instructions.xxxx)

– describes the principles of STO function, the applied standards, the safety-related data and the electrical data. It presents the requested information for installation and commissioning of STO function

iPOS Dual Loop drives Software reference (091.027.DL.Software.xxxx)

– describes the compatible software installation, drive software setup commissioning, introduction to TML motion programming, includes the scaling factors between the real SI units and the drive internal units.

Help of the EasySetUp software – describes how to use **EasySetUp** to quickly setup any Technosoft drive for your application using only 2 dialogues. The output of EasySetUp is a set of setup data that can be downloaded into the drive EEPROM or saved on a PC file. At power-on, the drive is initialized with the setup data read from its EEPROM. With EasySetUp it is also possible to retrieve the complete setup information from a drive previously programmed. **EasySetUp can be downloaded free of charge from Technosoft web page**

iPOS CANopen Programming **(part no. P091.063.iPOS.UM.xxxx)** – explains how to program the iPOS family of intelligent drives using **CANopen** protocol and describes the associated object dictionary for **CiA 301 v.4.2** application layer and communication profile, **CiA WD 305 v.2.2.13** layer settings services and protocols and **CiA DSP 402 v4.1.1** device profile for drives and motion control now included in IEC 61800-7-1 Annex A, IEC 61800-7-201 and IEC 61800-7-301 standards

CoE Programming **(part no. P091.064.UM.xxxx)** – explains how to program the Technosoft intelligent drives using **CAN application protocol over EtherCAT®** and describes the associated object dictionary.

Motion Programming using EasyMotion Studio (part no. P091.034.ESM.UM.xxxx) – describes how to use the EasyMotion Studio to create motion programs using in Technosoft Motion Language (TML). EasyMotion Studio platform includes **EasySetUp** for the drive/motor setup, and a **Motion Wizard** for the motion programming. The Motion Wizard provides a simple, graphical way of creating motion programs and automatically generates all the TML instructions. *With EasyMotion Studio you can fully benefit from a key advantage of Technosoft drives – their capability to execute complex motions without requiring an external motion controller, thanks to their built-in motion controller.* **A demo version of EasyMotion Studio (with EasySetUp part fully functional) can be downloaded free of charge from the Technosoft web page**

TML_LIB v2.0 **(part no. P091.040.v20.UM.xxxx)** – explains how to program in **C, C++,C#, Visual Basic or Delphi Pascal** a motion application for the Technosoft intelligent drives using TML_LIB v2.0 motion control library for PCs. The TML_lib includes ready-to-run examples that can be executed on **Windows** or **Linux** (x86 and x64).

TML_LIB_LabVIEW v2.0 **(part no. P091.040.LABVIEW.v20.UM.xxxx)** – explains how to program in **LabVIEW** a motion application for the Technosoft intelligent drives using TML_LIB_Labview v2.0 motion control library for PCs. The TML_Lib_LabVIEW includes over 40 ready-to-run examples.

TML_LIB_S7 **(part no. P091.040.S7.UM.xxxx)** – explains how to program in a PLC **Siemens series S7-300 or S7-400** a motion application for the Technosoft intelligent drives using TML_LIB_S7 motion control library. The TML_LIB_S7 library is **IEC61131-3 compatible**.

TML_LIB_CJ1 **(part no. P091.040.CJ1.UM.xxxx)** – explains how to program in a PLC **Omron series CJ1** a motion application for the Technosoft intelligent drives using TML_LIB_CJ1 motion control library for PLCs. The TML_LIB_CJ1 library is **IEC61131-3 compatible**.

TML_LIB_X20 **(part no. P091.040.X20.UM.xxxx)** – explains how to program in a PLC **B&R series X20** a motion application for the Technosoft intelligent drives using TML_LIB_X20 motion control library for PLCs. The TML_LIB_X20 library is **IEC61131-3 compatible**.

TechnoCAN **(part no. P091.063.TechnoCAN.UM.xxxx)** – presents TechnoCAN protocol – an extension of the CANopen communication profile used for TML commands

If you Need Assistance …

If you want to …	Contact Technosoft at …
Visit Technosoft online	World Wide Web: http://www.technosoftmotion.com/
Receive general information or assistance (see Note)	World Wide Web: http://www.technosoftmotion.com/ Email: contact@technosoftmotion.com
Ask questions about product operation or report suspected problems (see Note)	Fax: (41) 32 732 55 04 Email: hotline@technosoftmotion.com
Make suggestions about, or report errors in documentation.	Mail: Technosoft SA Avenue des Alpes 20 CH-2000 Neuchatel, NE Switzerland

1 Safety information

Read carefully the information presented in this chapter before carrying out the drive installation and setup! It is imperative to implement the safety instructions listed hereunder.

This information is intended to protect you, the drive and the accompanying equipment during the product operation. Incorrect handling of the drive can lead to personal injury or material damage.

The following safety symbols are used in this manual:



WARNING!	***SIGNALS A DANGER TO THE OPERATOR WHICH MIGHT CAUSE BODILY INJURY. MAY INCLUDE INSTRUCTIONS TO PREVENT THIS SITUATION***



CAUTION!	***SIGNALS A DANGER FOR THE DRIVE WHICH MIGHT DAMAGE THE PRODUCT OR OTHER EQUIPMENT. MAY INCLUDE INSTRUCTIONS TO AVOID THIS SITUATION***

1.1 Warnings



WARNING!	***THE VOLTAGE USED IN THE DRIVE MIGHT CAUSE ELECTRICAL SHOCKS. DO NOT TOUCH LIVE PARTS WHILE THE POWER SUPPLIES ARE ON***



WARNING!	***TO AVOID ELECTRIC ARCING AND HAZARDS, NEVER CONNECT / DISCONNECT WIRES FROM THE DRIVE WHILE THE POWER SUPPLIES ARE ON***



WARNING!	***THE DRIVE MAY HAVE HOT SURFACES DURING OPERATION.***



WARNING!	***DURING DRIVE OPERATION, THE CONTROLLED MOTOR WILL MOVE. KEEP AWAY FROM ALL MOVING PARTS TO AVOID INJURY***

1.2 Cautions

CAUTION!	***THE POWER SUPPLIES CONNECTED TO THE DRIVE MUST COMPLY WITH THE PARAMETERS SPECIFIED IN THIS DOCUMENT***

CAUTION!	***TROUBLESHOOTING AND SERVICING ARE PERMITTED ONLY FOR PERSONNEL AUTHORISED BY TECHNOSOFT***

To prevent electrostatic damage, avoid contact with insulating materials, such as synthetic fabrics or plastic surfaces. In order to discharge static electricity build-up, place the drive on a grounded conductive surface and also ground yourself.

1.3 Quality system, conformance and certifications

IQNet and **Quality Austria** certification about the implementation and maintenance of the Quality Management System which fulfills the requirements of Standard **ISO 9001:2015**.
Quality Austria Certificate about the application and further development of an effective **Quality Management System** complying with the requirements of Standard **ISO 9001:2015**

REACH Compliance - TECHNOSOFT hereby confirms that this product comply with the legal obligations regarding Article 33 of the European REACH Regulation 1907/2006 (Registration, Evaluation, Authorization and Restriction of Chemicals), which came into force on 01.06.2007.

RoHS Compliance - Technosoft SA here with declares that this product is manufactured in compliance with the RoHS directive 2002/95/EC on the restriction of the use of certain hazardous substances in electrical and electronic equipment (RoHS)

Technosoft SA hereby declares that this product conforms to the following European applicable directives:

2014/30/EU	**Electromagnetic Compatibility (EMC) Directive**
2014/35/EU	**Low Voltage Directive (LVD)**
93/68/EEC	**CE Marking Directive**

Conflict minerals statement - Technosoft declares that the company does not purchase 3T&G (tin, tantalum, tungsten & gold) directly from mines or smelters...
We have no indication that Technosoft products contain minerals from conflict mines or smelters in and around the DRC.
STO compliance – TUV SUD certifies that this product is SIL 3 / Cat 3 / PL e compatible and is in conformity with the following safety – related directives:
EN ISO 13849-1:2015 Safety of machinery - Safety-related parts of control systems - Part 1: General principles for design
EN 61800-5-1:2007 Adjustable speed electrical power drive systems — Safety requirements — Electrical, thermal and energy
EN 61800-5-2:2007 Adjustable speed electrical power drive systems - Safety requirements –Functional
EN 61508:2010 Functional safety of electrical/electronic/programmable electronic safety-related systems
EN ISO 13849-1:2008 Safety of machinery - Safety-related parts of control systems
EN 61326-3-1:2008 - General industrial applications - EMC - Immunity requirements for functional safety

For other certifications visit: http://technosoftmotion.com/en/quality-system

2 Product Overview

2.1 Introduction

The **iPOS80x0** is a family of fully digital intelligent servo drives, based on the latest DSP technology and they offer unprecedented drive performance combined with an embedded motion controller.

Suitable for control of brushless DC, brushless AC (vector control), DC brushed motors and step motors, the iPOS80x0 drives accept as position feedback incremental encoders (quadrature or sine/cosine) and absolute encoders (SSI and BiSS-C).

All drives perform position, speed or torque control and work in single, multi-axis or stand-alone configurations. Thanks to the embedded motion controller, the iPOS80x0 drives combine controller, drive and PLC functionality in a single compact unit and are capable to execute complex motions without requiring intervention of an external motion controller. Using the high-level Technosoft Motion Language (**TML**) the following operations can be executed directly at drive level:

- Setting various motion modes (profiles, PVT, PT, electronic gearing[1] or camming[1], etc.)
- Changing the motion modes and/or the motion parameters
- Executing homing sequences
- Controlling the program flow through:
  - Conditional jumps and calls of TML functions
  - TML interrupts generated on pre-defined or programmable conditions (protections triggered, transitions on limit switch or capture inputs, etc.)
  - Waits for programmed events to occur
- Handling of digital I/O and analogue input signals
- Executing arithmetic and logic operations
- Performing data transfers between axes
- Controlling motion of an axis from another one via motion commands sent between axes[2]
- Sending commands to a group of axes (multicast). This includes the possibility to start simultaneously motion sequences on all the axes from the group[2]
- Synchronizing all the axes from a network

By implementing motion sequences directly at drive level you can really distribute the intelligence between the master and the drives in complex multi-axis applications, reducing both the development time and the overall communication requirements. For example, instead of trying to command each movement of an axis, you can program the drives using TML to execute complex motion tasks and inform the master when these tasks are done. Thus, for each axis control the master job may be reduced at: calling TML functions stored in the drive EEPROM and waiting for a message, which confirms the TML functions execution completion.

All iPOS80x0 CAN drives are equipped with a serial RS232 and a CAN 2.0B interface that can be set by hardware pins to operate in 2 communication protocol modes:

- **CANopen**
- **TMLCAN**

The iPOS80x0 CAT drives support only the EtherCAT® communication protocol. They communicate through the serial RS232 interface for software commissioning and the EtherCAT® interface.

When **CANopen** mode is selected, the iPOS80x0 conforms to **CiA 301 v4.2** application layer communication profile, the **CiA WD 305 v2.2.13** and **CiA DSP 402 v4.1.1** device profile for drives and motion control, now included in IEC 61800-7-1 Annex A, IEC 61800-7-201 and IEC 61800-7-301 standards. In this mode, the iPOS80x0 may be controlled via a CANopen master. The iPOS drive offers the possibility for a CANopen master to call motion sequences/ functions, written in TML and stored in the drive EEPROM, using manufacturer specific objects. Also, the drives can communicate separately between each other by using non reserved 11 bit identifiers.

When **TMLCAN** mode is selected, the iPOS80x0 behaves as standard Technosoft intelligent drive and conforms to Technosoft protocol for exchanging TML commands via CAN-bus. When TMLCAN protocol is used, it is not mandatory to have a master. Any iPOS80x0 can be set to operate standalone, and may play the role of a master to coordinate both the network communication/synchronization and the motion application via TML commands sent directly to the other drives.

When higher level coordination is needed, apart from a CANopen master, the iPOS80x0 drives can also be controlled via a PC or a PLC using one of the **TML_LIB** motion libraries.

[1] Available if the master axis sends its position via a communication channel, or by using the secondary encoder input

[2] Available only for CAN drives

For iPOS80x0 commissioning **EasySetUp** or **EasyMotion Studio** PC applications may be used.

EasySetUp is a subset of EasyMotion Studio, including only the drive setup part. The output of EasySetUp is a set of setup data that can be downloaded into the drive EEPROM or saved on a PC file. At power-on, the drive is initialized with the setup data read from its EEPROM. With EasySetUp it is also possible to retrieve the complete setup information from a drive previously programmed. EasySetUp shall be used for drive setup in all cases where the motion commands are sent exclusively from a master. Hence neither the iPOS80x0 TML programming capability nor the drive camming mode are used. **EasySetUp can be downloaded free of charge from Technosoft web page.**

EasyMotion Studio platform includes EasySetUp for the drive setup, and a **Motion Wizard** for the motion programming. The Motion Wizard provides a simple, graphical way of creating motion programs and automatically generates all the TML instructions. *With EasyMotion Studio you can execute complex motions, thanks to their built-in motion controller*s. EasyMotion Studio, may be used to program motion sequences in TML. This is the iPOS80x0 typical CAN operation mode when TMLCAN protocol is selected. EasyMotion Studio can also be used with the CANopen protocol, if the user wants to call TML functions stored in the drive EEPROM or to use the camming mode. With camming mode, EasyMotion Studio offers the possibility to quickly download and test a cam profile and also to create a **.sw** file with the cam data. The .sw file can be afterwards stored in a master and downloaded to the drive, wherever needed. **A demo version of EasyMotion Studio (with EasySetUp part fully functional) can be downloaded free of charge from Technosoft web page.**

2.2 Product Features

- Fully digital servo drive suitable for the control of rotary or linear brushless, DC brush, and step motors
- Very compact design
- Sinusoidal (FOC) or trapezoidal (Hall-based) control of brushless motors
- Open or closed-loop control of 2 and 3-phase steppers
- STO: 2 safe torque-off inputs, safety integrity level (SIL3/Cat3/PLe) acc. to EN61800-5-1;-2/ EN61508-3;-4/ EN ISO 13849-1. When left not connected will disable the motor outputs. This provides a dual redundant hardware protection that cannot be overdriven by the software or other hardware components.
- Various modes of operation:
  - CAN version: including: torque, speed or position control; position or speed profiles, Cyclic Synchronous Position (CSP) for CANopen mode, external reference mode (analogue or encoder feedback) or sent via a communication bus
  - EtherCAT version: position or speed profiles, Cyclic Synchronous Position (CSP), Cyclic Synchronous Velocity (CSV) and Cyclic Synchronous Torque (CST)
- Technosoft Motion Language (TML) instruction set for the definition and execution of motion sequences
- Standalone operation with stored motion sequences
- Communication:
  - RS-232 serial up to 115kbits/s
  - CAN-bus 2.0B up to 1Mbit/s (for CAN drives)
  - Dual 100Mbps EtherCAT® interfaces, for use in daisy-chaining topologies (for CAT drives)
- Digital and analog I/Os:
  - 4 digital inputs: 12-36 V, programmable polarity: sourcing/NPN or sinking/PNP: 2 Limit switches and 2 general-purpose
  - 4 digital outputs: 5-36 V, with 0.5 A, sinking/NPN open-collector (Ready, Error and 2 general-purpose)
  - NTC/PTC analogue Motor Temperature sensor input
- Electro-Mechanical brake support: software configurable digital Output0 to control motor brake; max 2A
- Feedback devices (dual-loop support)

  1st feedback devices supported:
  - Incremental encoder interface (differential)
  - Analog sin/cos encoder interface (differential $1V_{PP}$)
  - Pulse & direction interface (differential or single ended upon request) for external (master) digital reference

  2nd feedback devices supported:
  - Incremental encoder interface (differential only)
  - Pulse & direction interface (differential only) for external (master) digital reference
  - BiSS-C / SSI encoder interface

  Separate feedback devices supported:
  - Digital Hall sensor interface (single-ended and open collector)
  - 2 analogue inputs: 12 bit, +/-10V and 0-5V: Reference and Feedback (for Tacho) or general purpose

- Various motion programming modes:
  - Position profiles with trapezoidal or S-curve speed shape
  - Position, Velocity, Time (PVT) 3rd order interpolation
  - Position, Time (PT) 1st order interpolation
  - Cyclic Synchronous Position (CSP) for CANopen mode and EtherCAT® drives.
  - Cyclic Synchronous Velocity (CSV) only for EtherCAT® drives.
  - Cyclic Synchronous Torque (CST) only for EtherCAT® drives.
  - Electronic gearing and camming
  - 35 Homing modes
- 127 h/w selectable addresses
- Two CAN operation modes selectable by HW switch (only for CAN drives):
  - **CANopen** – conforming with **CiA 301 v4.2, CiA WD 305 v2.2.13** and **CiA DSP 402 v4.1.1**
  - **TMLCAN** – intelligent drive conforming with Technosoft protocol for exchanging TML commands via CAN-bus
- EtherCAT® supported protocols for for CAT drives:
  - **CoE** - CAN application protocol over EtherCAT
  - **FoE** – File over EtherCAT – for setup/TML functions and firmware update
  - **EoE** – Ethernet over EtherCAT – for Easy Motion studio communication over EtherCAT
- 16K × 16 internal SRAM memory for data acquisition
- 16K × 16 E^2ROM to store TML motion programs, cam tables and other user data
- PWM switching frequency up to 100kHz
- Motor supply: 12-80V
- Logic supply: 9-36V.
- STO supply: 18-40V
- Output current: iPOS8010 : 10A[1] continuous; 20A peak
  iPOS8020: 20A[2] continuous; 40A peak
- Operating ambient temperature: 0-40°C (over 40°C with derating)
- Protections:
  - Short-circuit between motor phases
  - Short-circuit from motor phases to ground
  - Over-voltage
  - Under-voltage
  - Over-current
  - Over-temperature
  - Communication error
  - Control error

[1] 10A cont. with DC, step and BLDC motors (trapezoidal), 10A amplitude ($7.1A_{RMS}$) for PMSM (sinusoidal)

[2] 20A cont. with DC, step and BLDC motors (trapezoidal), 20A amplitude ($14.2A_{RMS}$) for PMSM (sinusoidal)

2.3 Identification Labels

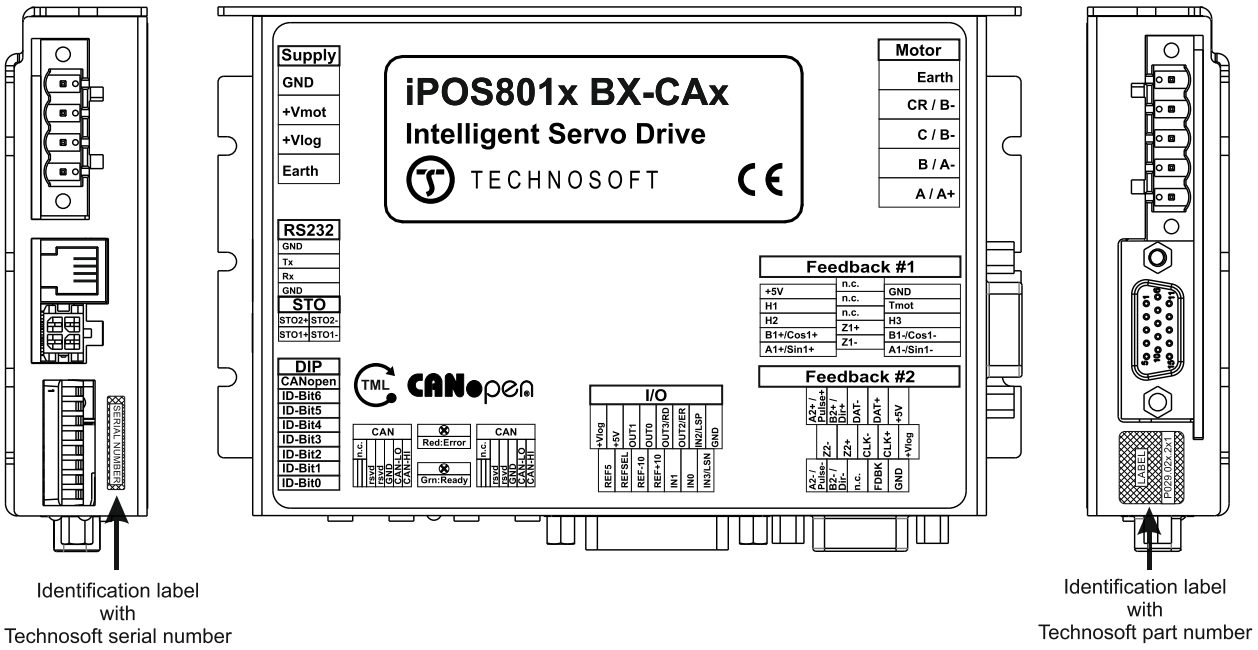

Figure 2.3.1. *iPOS80x0 BX-CAx identification labels*

The iPOS80x0 BX can have the following part numbers and names on the identification label:

p.n. **P029.025.E201** name iPOS8010 BX-CAN – CAN execution, 10A nominal current

p.n. **P029.026.E201** name iPOS8020 BX-CAN – CAN execution, 20A nominal current

p.n. **P029.025.E221** name iPOS8010 BX-CAT – EtherCAT execution, 10A nominal current

p.n. **P029.026.E221** name iPOS8020 BX-CAT – EtherCAT execution, 20A nominal current

2.4 Supported Motor-Sensor Configurations

2.4.1 Single loop configurations

The position and/or speed are controlled using one feedback sensor. The other available feedback sensor input can be used for External reference Position or Velocity, Pulse and Direction, Electronic Gearing or Camming.

*The drive can be delivered with FDBK#1 as single ended upon request

Sensor / Motor			Brushless PMSM	Brushless BLDC	DC Brush	Stepper 2 phase	Stepper 3 phase
Sensor type	**Sensor location**						
Incr. encoder	FDBK #1* (diff.) FDBK #2 (diff.)		Yes	-	Yes	Yes	-
Incr. encoder + Digital Hall	FDBK #1* (diff.) FDBK #2 (diff.)	Digital halls interface	Yes	Yes	-	-	-
SSI	FDBK #2 (diff.)		Yes	-	Yes	Yes	-
BiSS-C	FDBK #2 (diff.)		Yes	-	Yes	Yes	-
Analogue Sin/Cos encoder	FDBK #1* (diff.)		Yes	-	Yes	Yes	-
Tacho	Analogue input: Feedback		-	-	Yes	-	-
Open-loop (no sensor)	-		-	-	-	Yes	Yes
Open-loop (with step loss detection using Incr. Encoder/SinCos/SSI/BiSS)	FDBK #1* (diff.) FDBK #2 (diff.)		-	-	-	Yes	Yes

2.4.2 Dual loop configurations

The motor speed control loop is closed on one feedback connected on the motor while the motor position control loop is closed on the other available feedback which is placed on the load. There is usually a transmission between the load and the motor.

Motor type	Feedback #1	Feedback #2
PMSM	• Incremental encoder (differential) • Analogue Sin/Cos encoder	• Incremental encoder (differential) • SSI/BiSS C encoder
BLDC	• Incremental encoder (differential) + Digital halls	• Incremental encoder (differential) + Digital Halls • SSI/BiSS C encoder (only on load)
Stepper 2ph	• Incremental encoder (differential) • Analogue Sin/Cos encoder	• Incremental encoder (differential) • SSI/BiSS C encoder
DC Brush	• Incremental encoder (differential) • Analogue Sin/Cos encoder • Analogue Tacho (only on motor)	• Incremental encoder (differential) • SSI/BiSS C encoder

Each defined motor type can have any combination of the supported feedbacks either on motor or on load.

Example:

-PMSM motor with Incremental encoder (from feedback #1) on motor and Incremental encoder (from feedback#2) on load

-DC brush motor with SSI encoder (from feedback #2) on motor and Sin/Cos encoder (from feedback #1) on load.

3 Hardware Installation

3.1 iPOS80x0 BX-CAN/CAT Board Dimensions

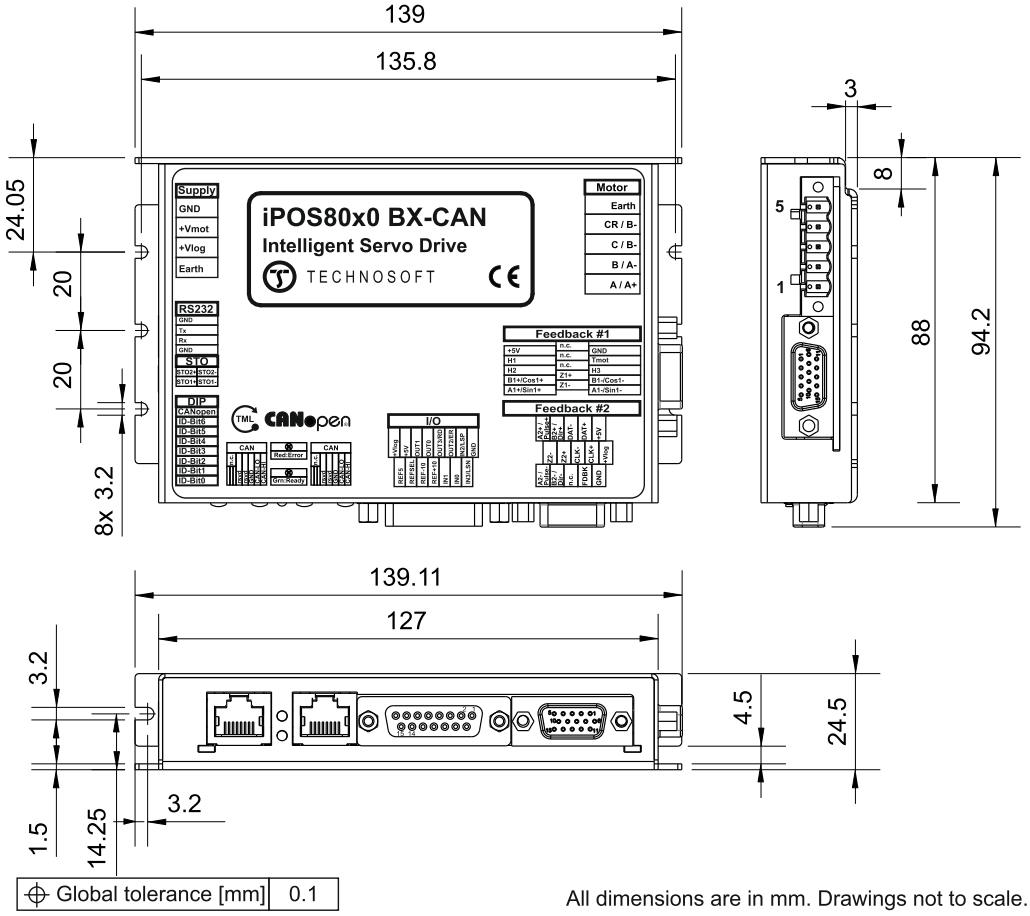

Figure 3.1.1. *iPOS80x0 BX-CAN/CAT drive dimensions*

3.2 Mechanical Mounting

The iPOS80x0 BX drive is intended to be mounted horizontally on a metallic support using the provided mounting holes and the recommended mating connectors, as specified in chapter **3.3.2 Mating Connectors for CAN and CAT.**

The metallic support must act as a cooling heat sink.

For thermal calculations, use the graphs below. Power Losses @10A applies to iPOS8010 and Power Losses @20A applies to iPOS8020.

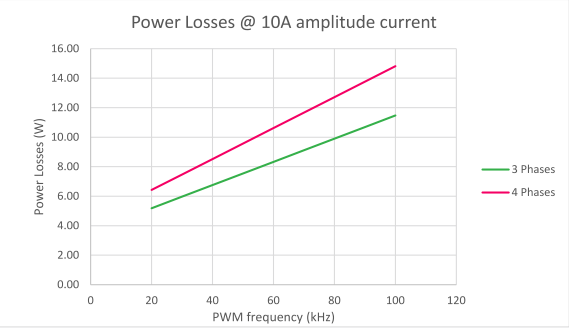



3.3 Connectors and Pinouts

3.3.1 Pinouts for iPOS80x0 BX-CAN

Pin	Name	Description
1	CANopen	ON (down): CANopen communication protocol OFF (up): TMLCAN communication protocol
2	ID-Bit6	Hardware AxisID selection switches They represent the first 7 bits of an 8 bit Axis ID number.
3	ID-Bit5	
4	ID-Bit4	
5	ID-Bit3	
6	ID-Bit2	
7	ID-Bit1	
8	ID-Bit0	

Pin	Name	Description	
1	STO1+	Safe Torque Off input 1, positive input(opto-isolated, 18÷40V)	Apply between both STO1+, STO2+ and STO1-, STO2- 24V DC from SELV/ PELV power supply for motor PWM output operation
2	STO2+	Safe Torque Off input 2, positive input(opto-isolated, 18÷40V)	
3	STO1-	Safe Torque Off input 1, negative input(opto-isolated, 18÷40V)	
4	STO2-	Safe Torque Off input 2, negative input(opto-isolated, 18÷40V)	

Pin	Name	Description
1	GND	Return ground for RS-232 pins
2	232TX	RS-232 Data Transmission
3	232RX	RS-232 Data Reception
4	GND	Return ground for RS-232 pins

Pin	Name	Description
1	GND	Negative return (ground) of the power supply
2	$+V_{MOT}$	Positive terminal of the motor supply: to $80V_{DC}$.
3	$+V_{LOG}$	Positive terminal of the logic supply input: 9 to $36V_{DC}$
4	Earth	Earth connection

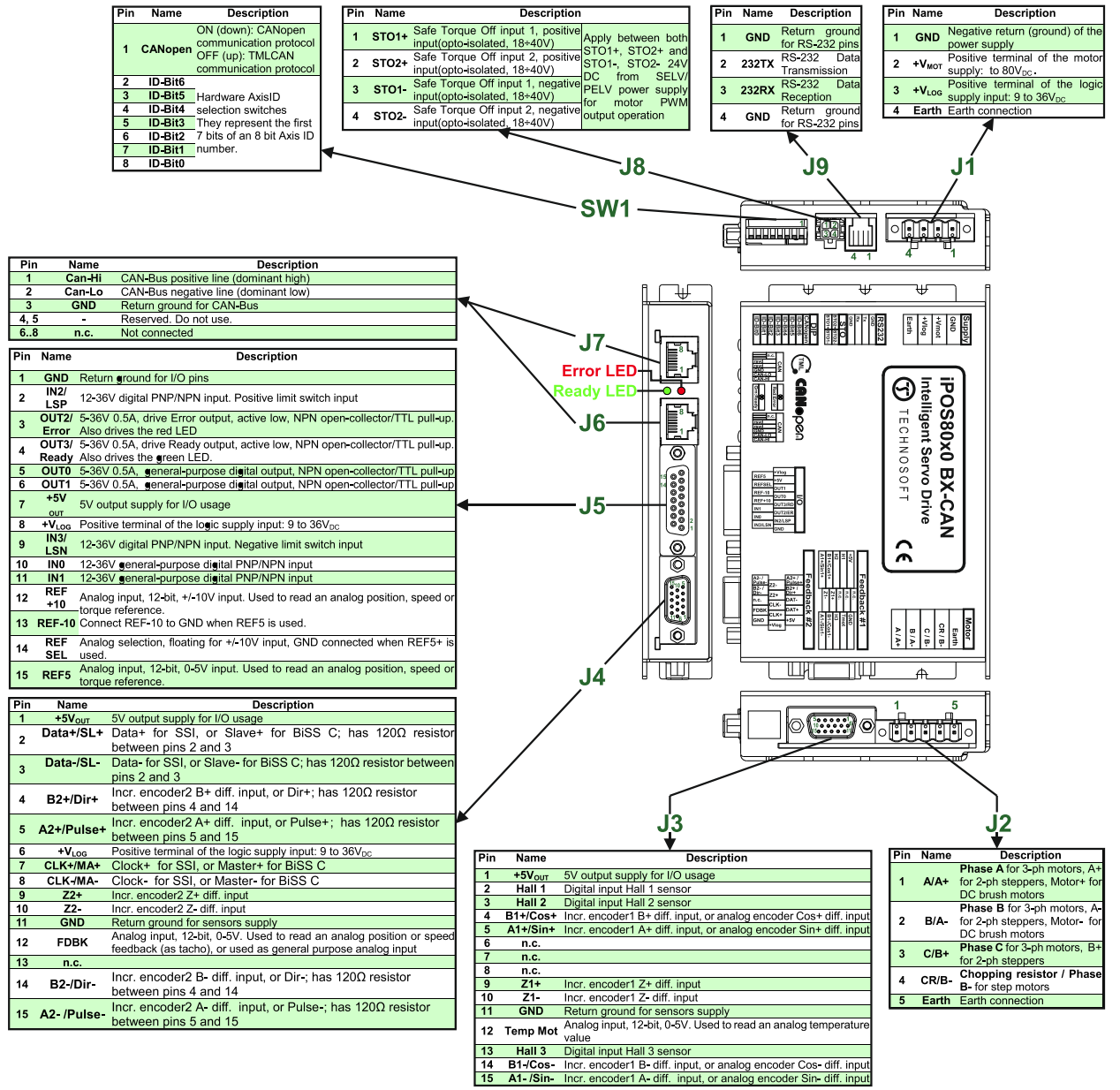

Pin	Name	Description
1	Can-Hi	CAN-Bus positive line (dominant high)
2	Can-Lo	CAN-Bus negative line (dominant low)
3	GND	Return ground for CAN-Bus
4, 5	-	Reserved. Do not use.
6..8	n.c.	Not connected

Pin	Name	Description
1	GND	Return ground for I/O pins
2	IN2/ LSP	12-36V digital PNP/NPN input. Positive limit switch input
3	OUT2/ Error	5-36V 0.5A, drive Error output, active low, NPN open-collector/TTL pull-up. Also drives the red LED
4	OUT3/ Ready	5-36V 0.5A, drive Ready output, active low, NPN open-collector/TTL pull-up. Also drives the green LED.
5	OUT0	5-36V 0.5A, general-purpose digital output, NPN open-collector/TTL pull-up
6	OUT1	5-36V 0.5A, general-purpose digital output, NPN open-collector/TTL pull-up
7	+5V OUT	5V output supply for I/O usage
8	$+V_{LOG}$	Positive terminal of the logic supply input: 9 to $36V_{DC}$
9	IN3/ LSN	12-36V digital PNP/NPN input. Negative limit switch input
10	IN0	12-36V general-purpose digital PNP/NPN input
11	IN1	12-36V general-purpose digital PNP/NPN input
12	REF +10	Analog input, 12-bit, +/-10V input. Used to read an analog position, speed or torque reference.
13	REF-10	Connect REF-10 to GND when REF5 is used.
14	REF SEL	Analog selection, floating for +/-10V input, GND connected when REF5+ is used.
15	REF5	Analog input, 12-bit, 0-5V input. Used to read an analog position, speed or torque reference.

Pin	Name	Description
1	$+5V_{OUT}$	5V output supply for I/O usage
2	Data+/SL+	Data+ for SSI, or Slave+ for BiSS C; has 120Ω resistor between pins 2 and 3
3	Data-/SL-	Data- for SSI, or Slave- for BiSS C; has 120Ω resistor between pins 2 and 3
4	B2+/Dir+	Incr. encoder2 B+ diff. input, or Dir+; has 120Ω resistor between pins 4 and 14
5	A2+/Pulse+	Incr. encoder2 A+ diff. input, or Pulse+; has 120Ω resistor between pins 5 and 15
6	$+V_{LOG}$	Positive terminal of the logic supply input: 9 to $36V_{DC}$
7	CLK+/MA+	Clock+ for SSI, or Master+ for BiSS C
8	CLK-/MA-	Clock- for SSI, or Master- for BiSS C
9	Z2+	Incr. encoder2 Z+ diff. input
10	Z2-	Incr. encoder2 Z- diff. input
11	GND	Return ground for sensors supply
12	FDBK	Analog input, 12-bit, 0-5V. Used to read an analog position or speed feedback (as tacho), or used as general purpose analog input
13	n.c.	
14	B2-/Dir-	Incr. encoder2 B- diff. input, or Dir-; has 120Ω resistor between pins 4 and 14
15	A2- /Pulse-	Incr. encoder2 A- diff. input, or Pulse-; has 120Ω resistor between pins 5 and 15

Pin	Name	Description
1	$+5V_{OUT}$	5V output supply for I/O usage
2	Hall 1	Digital input Hall 1 sensor
3	Hall 2	Digital input Hall 2 sensor
4	B1+/Cos+	Incr. encoder1 B+ diff. input, or analog encoder Cos+ diff. input
5	A1+/Sin+	Incr. encoder1 A+ diff. input, or analog encoder Sin+ diff. input
6	n.c.	
7	n.c.	
8	n.c.	
9	Z1+	Incr. encoder1 Z+ diff. input
10	Z1-	Incr. encoder1 Z- diff. input
11	GND	Return ground for sensors supply
12	Temp Mot	Analog input, 12-bit, 0-5V. Used to read an analog temperature value
13	Hall 3	Digital input Hall 3 sensor
14	B1-/Cos-	Incr. encoder1 B- diff. input, or analog encoder Cos- diff. input
15	A1- /Sin-	Incr. encoder1 A- diff. input, or analog encoder Sin- diff. input

Pin	Name	Description
1	A/A+	**Phase A** for 3-ph motors, A+ for 2-ph steppers, Motor+ for DC brush motors
2	B/A-	**Phase B** for 3-ph motors, A- for 2-ph steppers, Motor- for DC brush motors
3	C/B+	**Phase C** for 3-ph motors, B+ for 2-ph steppers
4	CR/B-	**Chopping resistor / Phase B-** for step motors
5	Earth	Earth connection

3.3.2 Mating Connectors for CAN and CAT

Image	Connector	Description	Manufacturer	Part Number	Image
	J1	Supply input, 4x5.08 female counter part for cable	Camden	CTBA9208/4FL	
	J2	Motor power, 5x5.08 female counter part for cable	Camden	CTBA9208/5FL	
	J3,J4	Feedback #1 +Hall & Feedback #2		generic 15-pin High Density D-Sub male	
	J9	RS232		generic RJ10-4/4 phone plug	
	J5	I/O ; Analog		generic 15-pin D-Sub male, DB15	
	J8	MICROFIT RECEPTACLE HOUSING, 2x2 WAY	MOLEX	43025-0400	
	J8	CRIMP PIN, MICROFIT, 5A	MOLEX	43030-0007	
	J6,J7	Standard 8P8C modular jack (RJ-45) male	-	-	

3.3.3 Pinouts for iPOS80x0 BX-CAT

Pin	Name	Description
1	Reserved	
2	ID-Bit6	
3	ID-Bit5	Hardware AxisID
4	ID-Bit4	selection switches
5	ID-Bit3	They represent the first
6	ID-Bit2	7 bits of an 8 bit Axis ID
7	ID-Bit1	number.
8	ID-Bit0	

Pin	Name	Description	
1	STO1+	Safe Torque Off input 1, positive input(opto-isolated, 18÷40V)	Apply between both STO1+, STO2+ and STO1-, STO2- 24V DC from SELV/ PELV power supply for motor PWM output operation
2	STO2+	Safe Torque Off input 2, positive input(opto-isolated, 18÷40V)	
3	STO1-	Safe Torque Off input 1, negative input(opto-isolated, 18÷40V)	
4	STO2-	Safe Torque Off input 2, negative input(opto-isolated, 18÷40V)	

Pin	Name	Description
1	GND	Return ground for RS-232 pins
2	232TX	RS-232 Data Transmission
3	232RX	RS-232 Data Reception
4	GND	Return ground for RS-232 pins

Pin	Name	Description
1	GND	Negative return (ground) of the power supply
2	$+V_{MOT}$	Positive terminal of the motor supply: to $80V_{DC}$.
3	$+V_{LOG}$	Positive terminal of the logic supply input: 9 to $36V_{DC}$
4	Earth	Earth connection

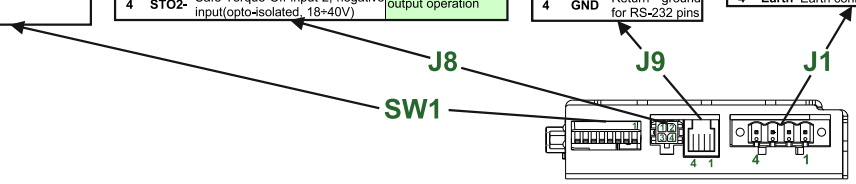

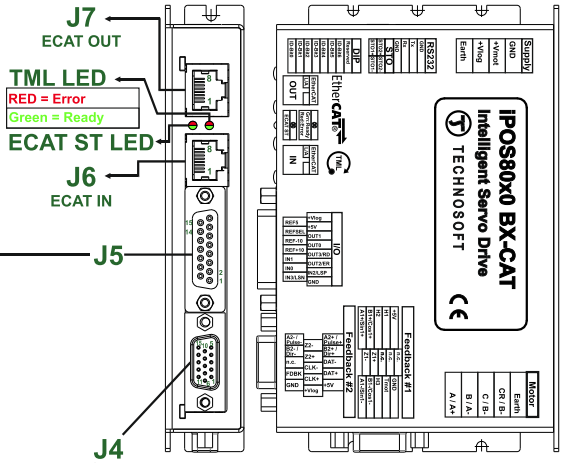

Pin	Name	Description
1	GND	Return ground for I/O pins
2	IN2/ LSP	12-36V digital PNP/NPN input. Positive limit switch input
3	OUT2/ Error	5-36V 0.5A, drive Error output, active low, NPN open-collector/TTL pull-up. Also drives the red LED
4	OUT3/ Ready	5-36V 0.5A, drive Ready output, active low, NPN open-collector/TTL pull-up. Also drives the green LED.
5	OUT0	5-36V 0.5A, general-purpose digital output, NPN open-collector/TTL pull-up
6	OUT1	5-36V 0.5A, general-purpose digital output, NPN open-collector/TTL pull-up
7	+5V OUT	5V output supply for I/O usage
8	$+V_{LOG}$	Positive terminal of the logic supply input: 9 to $36V_{DC}$
9	IN3/ LSN	12-36V digital PNP/NPN input. Negative limit switch input
10	IN0	12-36V general-purpose digital PNP/NPN input
11	IN1	12-36V general-purpose digital PNP/NPN input
12	REF +10	Analog input, 12-bit, +/-10V input. Used to read an analog position, speed or torque reference.
13	REF-10	Connect REF-10 to GND when REF5 is used.
14	REF SEL	Analog selection, floating for +/-10V input, GND connected when REF5+ is used.
15	REF5	Analog input, 12-bit, 0-5V input. Used to read an analog position, speed or torque reference.

Pin	Name	Description
1	$+5V_{OUT}$	5V output supply for I/O usage
2	Data+/SL+	Data+ for SSI, or Slave+ for BiSS C; has 120Ω resistor between pins 2 and 3
3	Data-/SL-	Data- for SSI, or Slave- for BiSS C; has 120Ω resistor between pins 2 and 3
4	B2+/Dir+	Incr. encoder2 B+ diff. input, or Dir+; has 120Ω resistor between pins 4 and 14
5	A2+/Pulse+	Incr. encoder2 A+ diff. input, or Pulse+; has 120Ω resistor between pins 5 and 15
6	$+V_{LOG}$	Positive terminal of the logic supply input: 9 to $36V_{DC}$
7	CLK+/MA+	Clock+ for SSI, or Master+ for BiSS C
8	CLK-/MA-	Clock- for SSI, or Master- for BiSS C
9	Z2+	Incr. encoder2 Z+ diff. input
10	Z2-	Incr. encoder2 Z- diff. input
11	GND	Return ground for sensors supply
12	FDBK	Analog input, 12-bit, 0-5V. Used to read an analog position or speed feedback (as tacho), or used as general purpose analog input
13	n.c.	
14	B2-/Dir-	Incr. encoder2 B- diff. input, or Dir-; has 120Ω resistor between pins 4 and 14
15	A2- /Pulse-	Incr. encoder2 A- diff. input, or Pulse-; has 120Ω resistor between pins 5 and 15

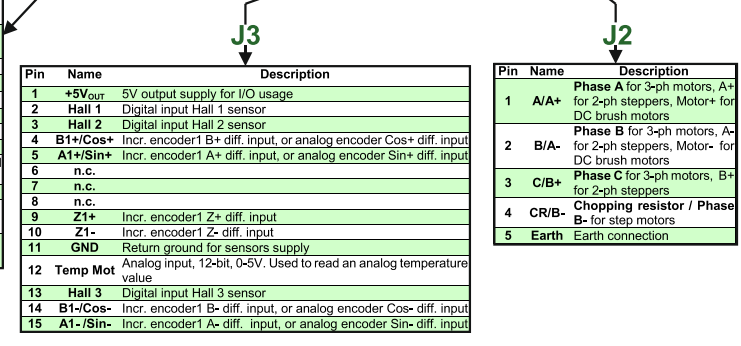

Pin	Name	Description
1	$+5V_{OUT}$	5V output supply for I/O usage
2	Hall 1	Digital input Hall 1 sensor
3	Hall 2	Digital input Hall 2 sensor
4	B1+/Cos+	Incr. encoder1 B+ diff. input, or analog encoder Cos+ diff. input
5	A1+/Sin+	Incr. encoder1 A+ diff. input, or analog encoder Sin+ diff. input
6	n.c.	
7	n.c.	
8	n.c.	
9	Z1+	Incr. encoder1 Z+ diff. input
10	Z1-	Incr. encoder1 Z- diff. input
11	GND	Return ground for sensors supply
12	Temp Mot	Analog input, 12-bit, 0-5V. Used to read an analog temperature value
13	Hall 3	Digital input Hall 3 sensor
14	B1-/Cos-	Incr. encoder1 B- diff. input, or analog encoder Cos- diff. input
15	A1- /Sin-	Incr. encoder1 A- diff. input, or analog encoder Sin- diff. input

Pin	Name	Description
1	A/A+	Phase A for 3-ph motors, A+ for 2-ph steppers, Motor+ for DC brush motors
2	B/A-	Phase B for 3-ph motors, A- for 2-ph steppers, Motor- for DC brush motors
3	C/B+	Phase C for 3-ph motors, B+ for 2-ph steppers
4	CR/B-	Chopping resistor / Phase B- for step motors
5	Earth	Earth connection

3.4 Connection diagrams

3.4.1 iPOS80x0 BX-CAN connection diagram

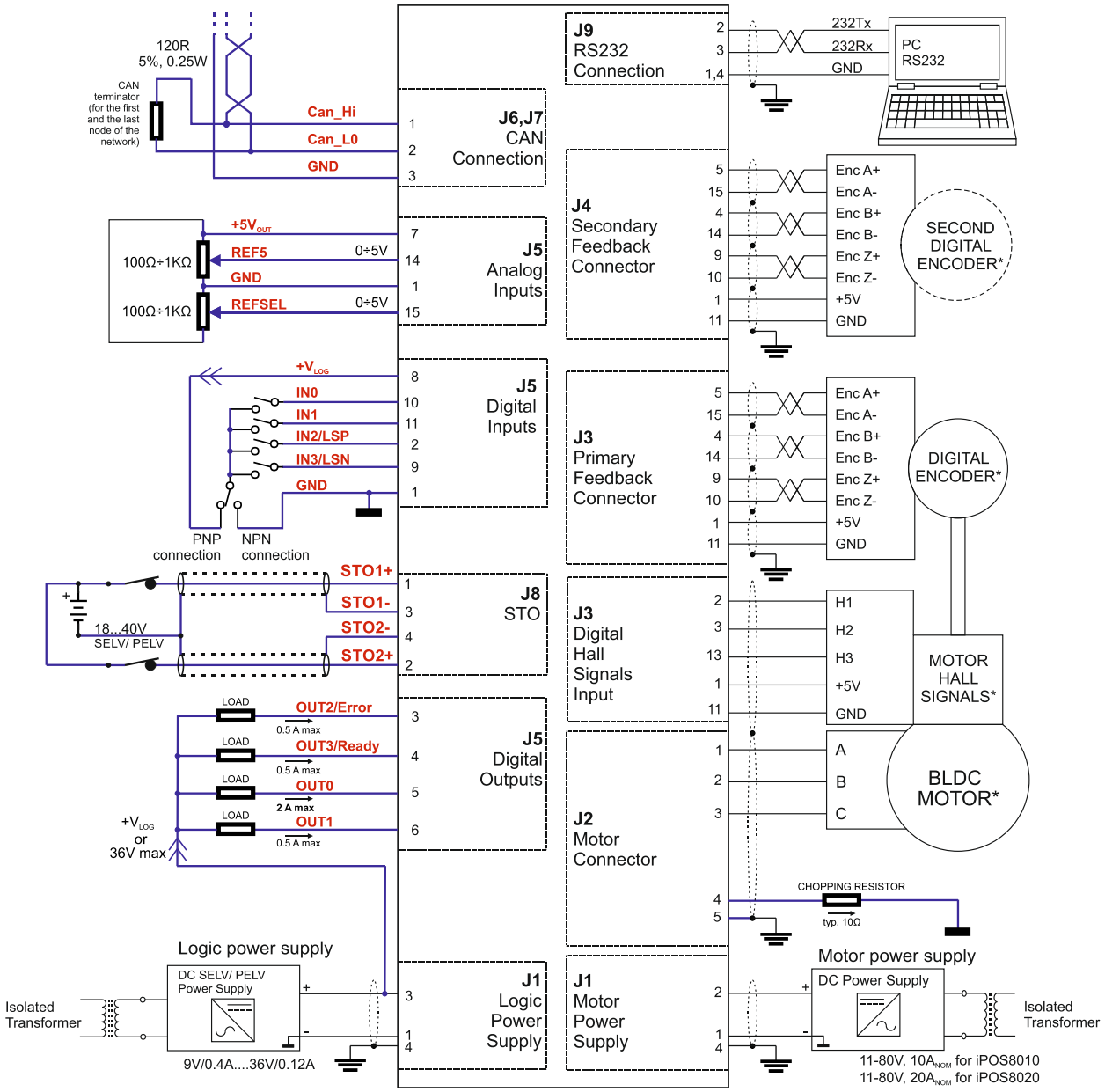

Figure 3.2. **iPOS80x0 BX-CAN Connection diagram**

* The digital inputs can be configured as PNP/NPN type in software setup

* For other available feedback / motor options, check the detailed connection diagrams below

3.4.2 iPOS80x0 BX-CAT connection diagram

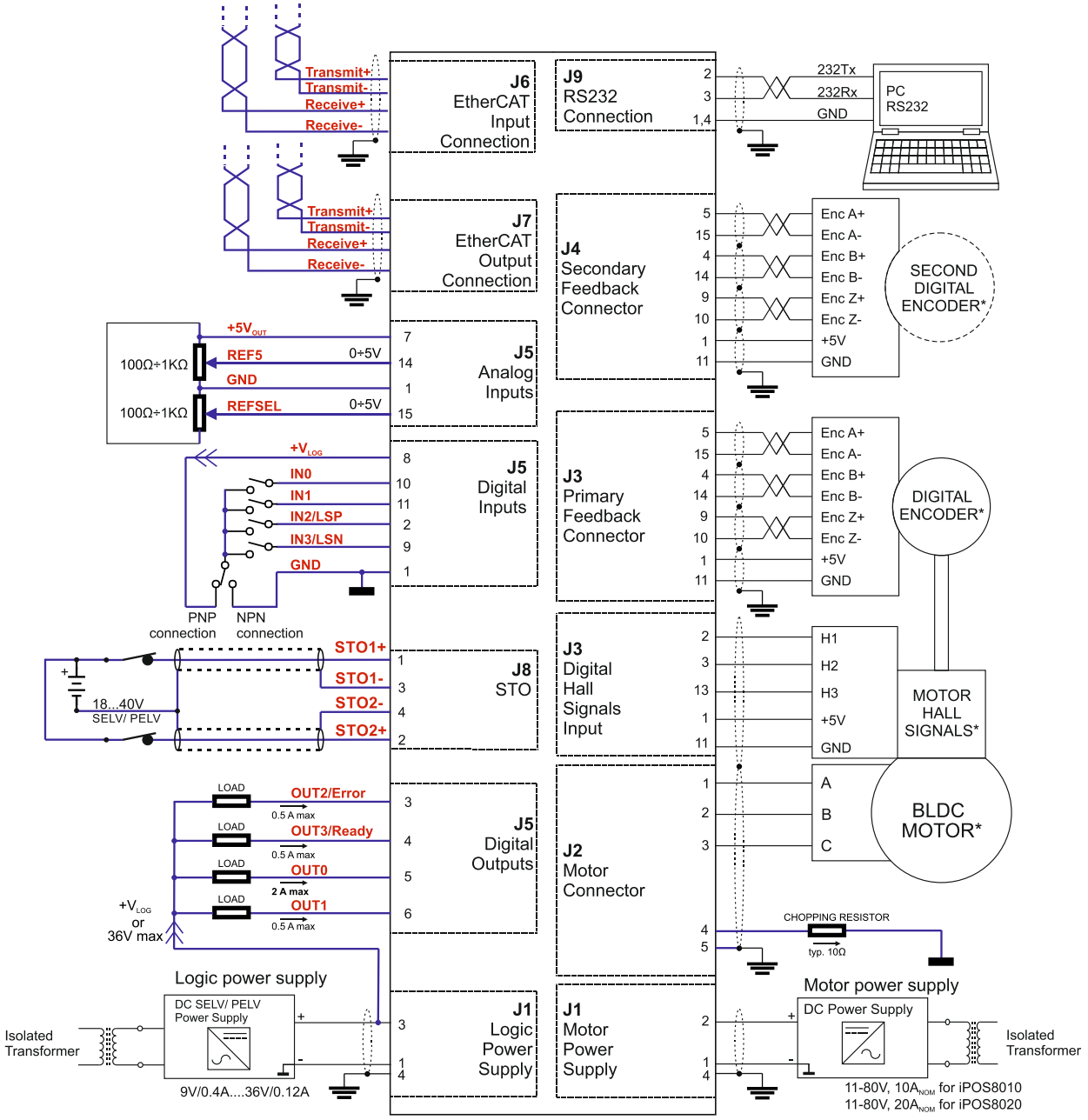

Figure 3.3. **iPOS80x0 BX-CAT Connection diagram**

* The digital inputs can be configured as PNP/NPN type in software setup
* For other available feedback / motor options, check the detailed connection diagrams below
* For a detailed EtherCAT bus connection diagram see **Figure 3.26. EtherCAT wiring.**

3.4.3 24V Digital I/O Connection

3.4.3.1 PNP inputs

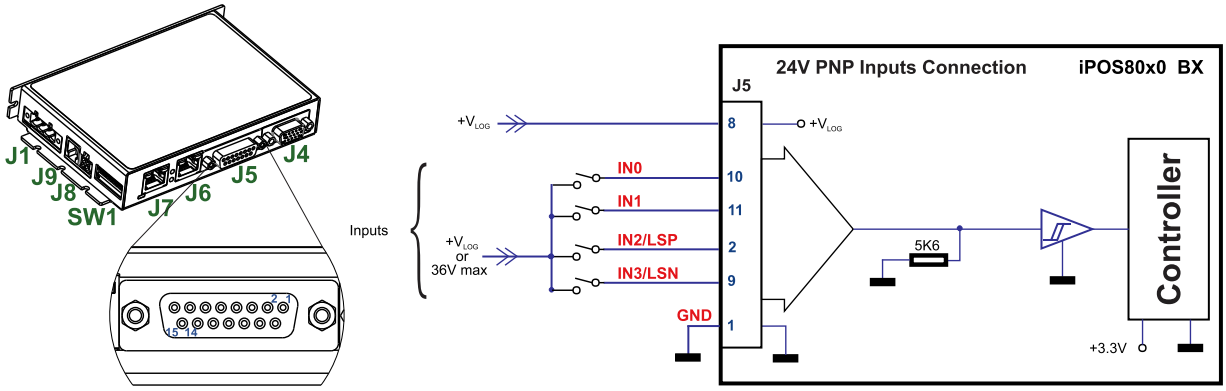

Figure 3.4. **24V Digital PNP Inputs connection**

Remarks:

1. *The inputs are selectable as PNP/ NPN by software.*
2. *The inputs are compatible with PNP type outputs (input must receive a positive voltage value (12-36V) to change its default state)*
3. *The length of the cables must be up to 30m, reducing the exposure to voltage surge in industrial environment.*

3.4.3.2 NPN inputs

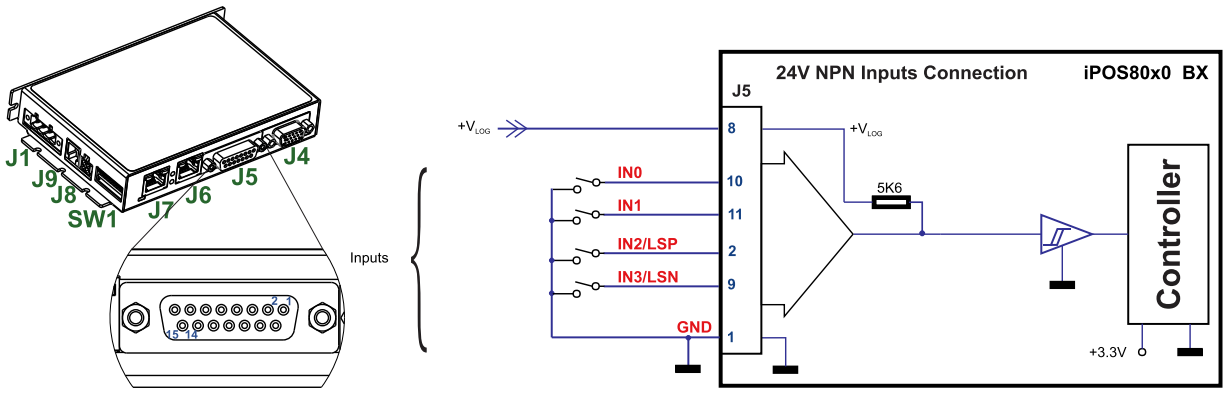

Figure 3.5. **24V Digital NPN Inputs connection**

Remarks:

1. *The inputs are selectable as PNP/ NPN by software.*
2. *The inputs are compatible with NPN type outputs (input must be pulled to GND to change its default state)*
3. *The length of the cables must be up to 30m, reducing the exposure to voltage surges in industrial environment.*

3.4.3.3 NPN outputs

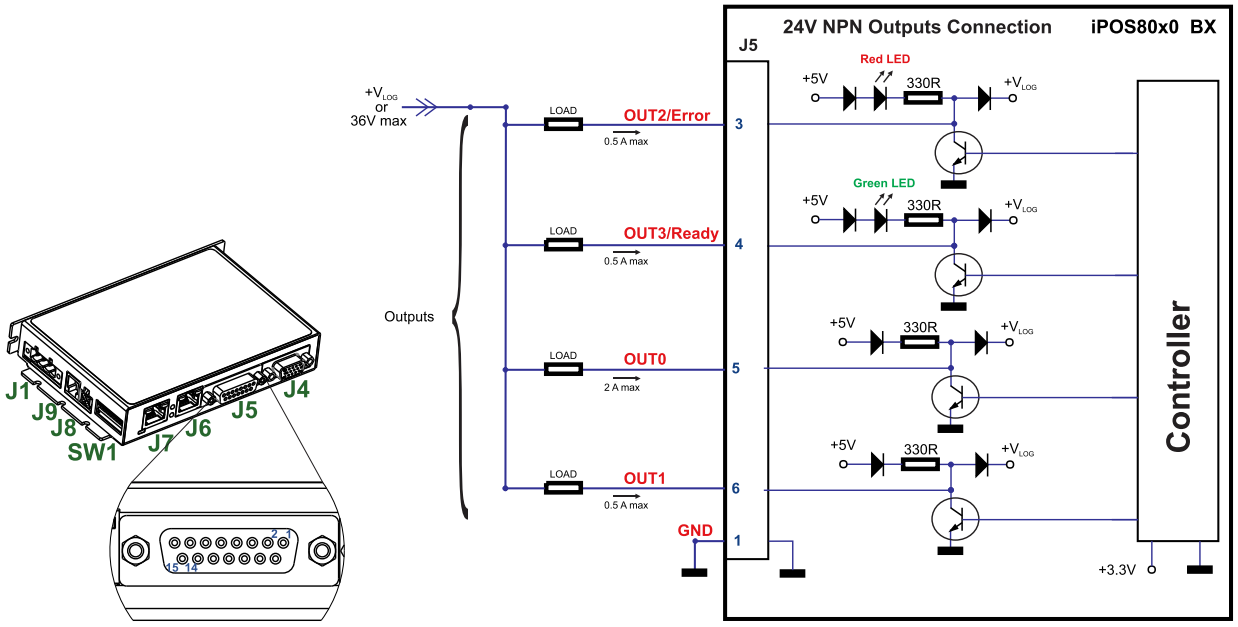

Figure 3.6. **24V Digital NPN Outputs connection**

Remark: *The outputs are compatible with NPN type inputs (load is tied to common $+V_{LOG}$, output pulls to GND when active and is floating when inactive)*

3.4.4 Analog Inputs Connection

3.4.4.1 0-5V Input Range

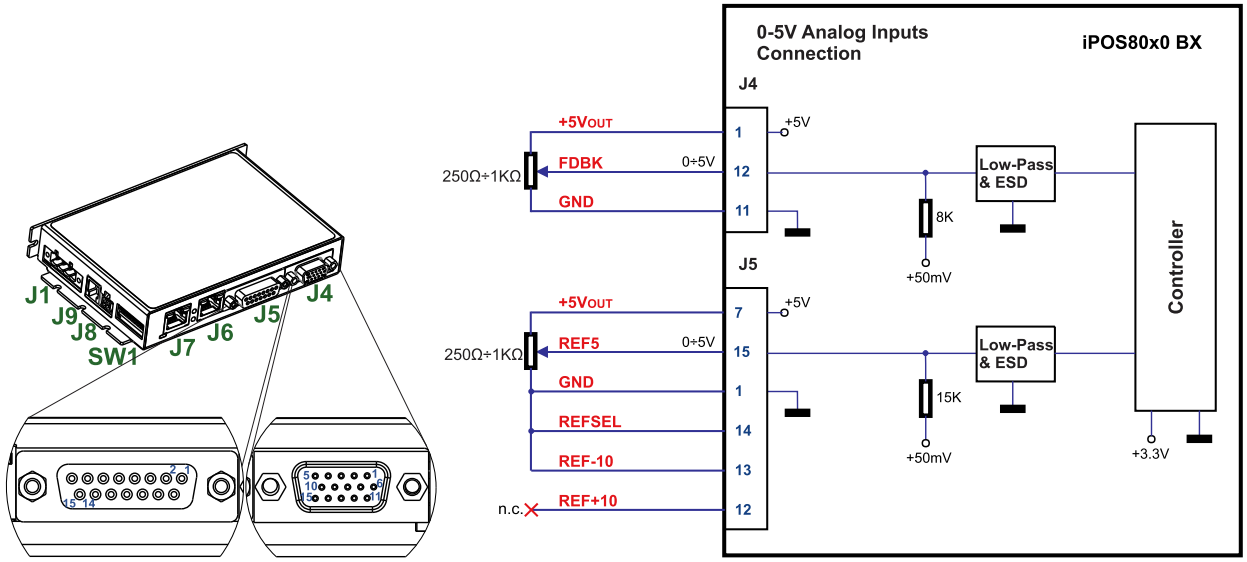

Figure 3.7. ***0-5V* Analog inputs connection**

Remark: *The length of the cables must be up to 30m, reducing the exposure to voltage surges in industrial environment.*

3.4.4.2 +/- 10V Input Range

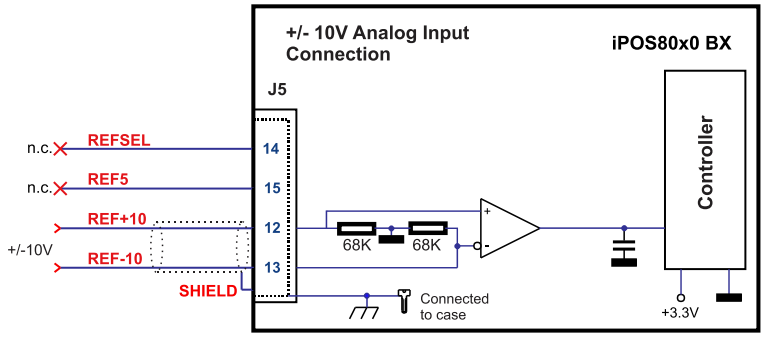

Figure 3.8. **+/-10V Analog inputs connection**

Remarks:

1. *The length of the cables must be up to 30m, reducing the exposure to voltage surges in industrial environment.*
2. *To Switch Ref and Fdbk signals, set the TML register ASR bit 10 to 1. It allows the +/-10V circuit to be used as feedback.*

3.4.4.3 Recommendation for wiring

a) If the analog signal source is single-ended, use a 2-wire shielded cable as follows: 1st wire connects the live signal to the drive positive input (+); 2nd wire connects the signal ground to the drive negative input(-).

b) If the analog signal source is differential and the signal source ground is isolated from the drive GND, use a 3-wire shielded cable as follows: 1st wire connects the signal plus to the drive positive input (+); 2nd wire connects the signal minus to the drive negative input (-) and 3rd wire connects the source ground to the drive GND

c) If the analog signal source is differential and the signal source ground is common with the drive GND, use a 2-wire shielded cable as follows: 1st wire connects the signal plus to the drive positive input (+); 2nd wire connects the signal minus to the drive negative input (-)

d) For all of the above cases, connect the cable shield to the drive GND and leave the other shield end unconnected to the signal source. To further increase the noise protection, use a double shielded cable with inner shield connected to drive GND and outer shield connected to the motor chassis (earth).

3.4.5 Motor connections

3.4.5.1 Brushless Motor connection

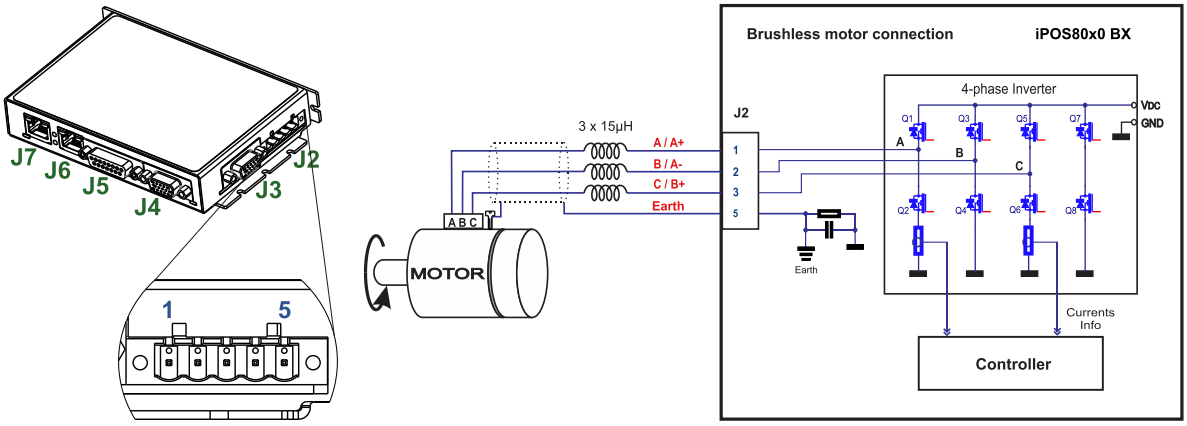

Figure 3.9. **Brushless motor connection**

Remark: *To hardware enable the motor outputs, connect STO1+ and STO2+ pins to +Vlog and STO1- and STO2- to GND.*

3.4.5.2 2-phase Step Motor connection

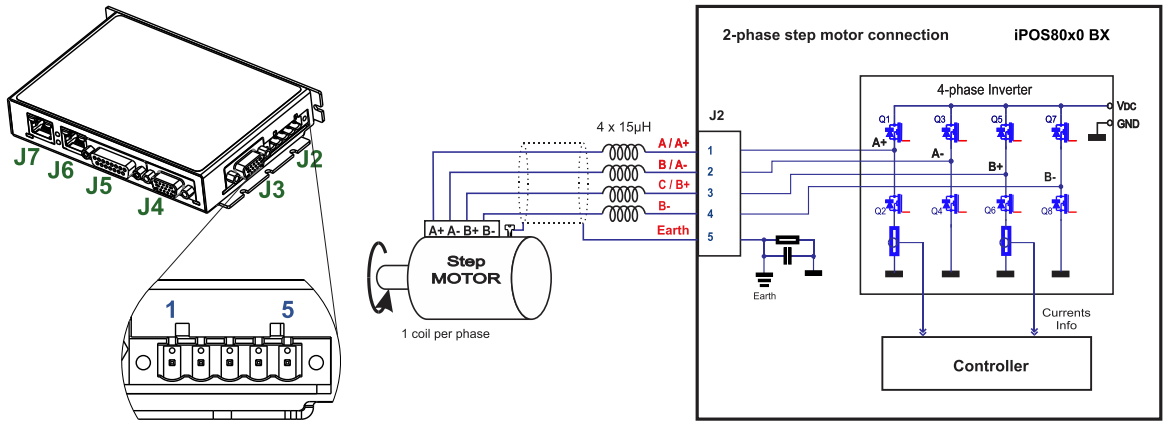

Figure 3.10. **2-phase step motor connection, one coil per phase**

Remark: *To hardware enable the motor outputs, connect STO1+ and STO2+ pins to +Vlog and STO1- and STO2- to GND.*

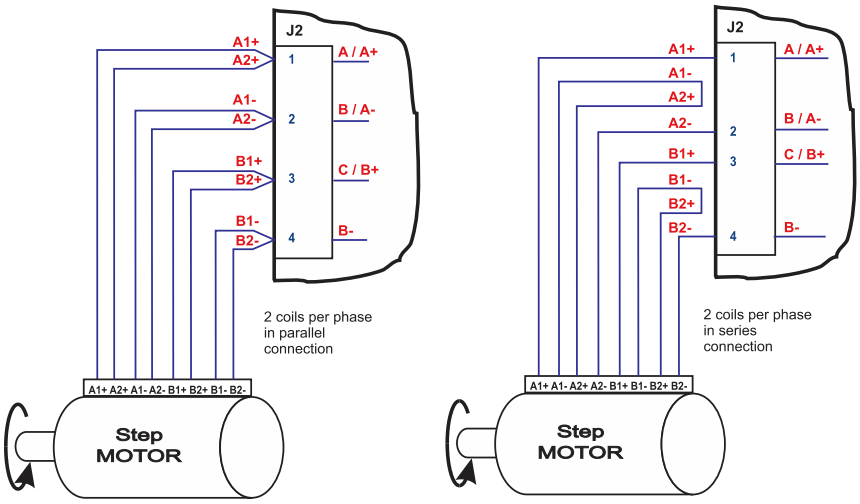

Figure 3.11. **2-phase step motor connection, two coils per phase**

3.4.5.3 3-Phase Step Motor connection

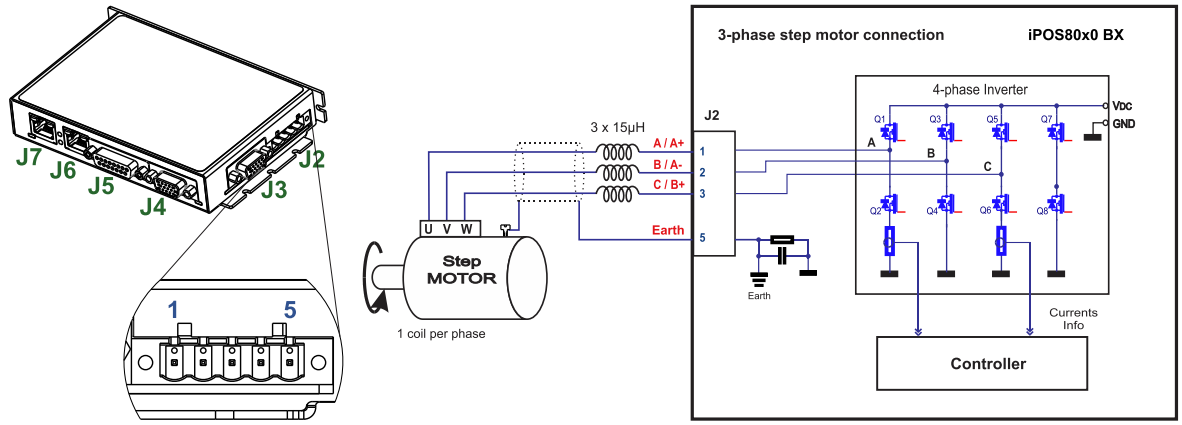

Figure 3.12. **3-phase step motor connection**

Remark: *To hardware enable the motor outputs, connect STO1+ and STO2+ pins to +Vlog and STO1- and STO2- to GND.*

3.4.5.4 DC Motor connection

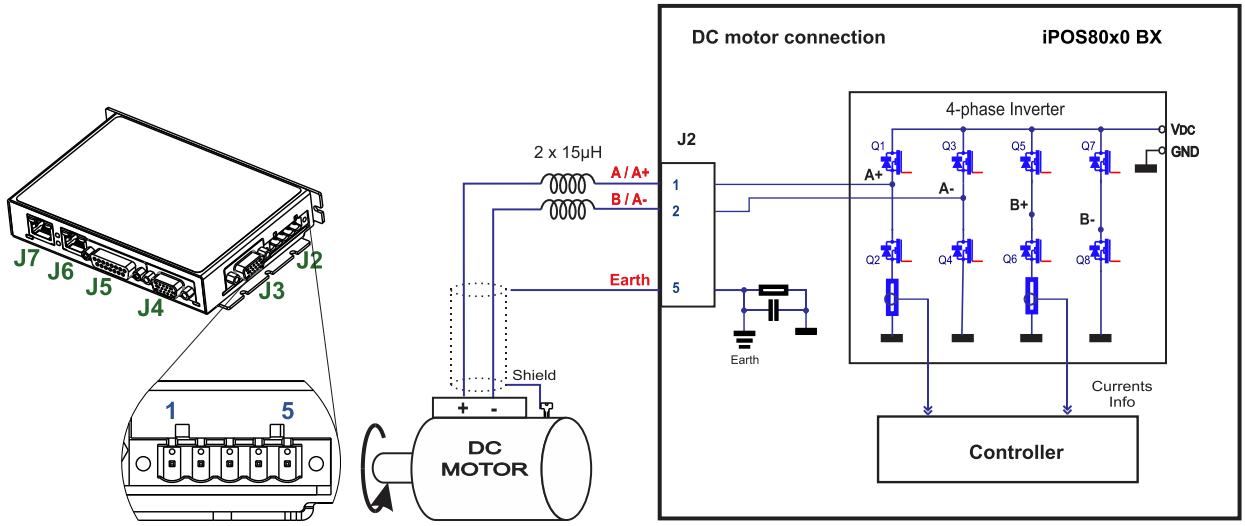

Figure 3.13. **DC Motor connection**

Remark: *To hardware enable the motor outputs, connect STO1+ and STO2+ pins to +Vlog and STO1- and STO2- to GND.*

3.4.5.5 Recommendations for motor wiring

a) Avoid running the motor wires in parallel with other wires for a distance longer than 2 meters. If this situation cannot be avoided, use a shielded cable for the motor wires. Connect the cable shield to the iPOS80x0 GND pin. Leave the other end disconnected.
b) In order to meet requirements of EMC radiated emissions it is necessary to add series inductors between drive outputs and motor cable. Each inductor shall be 15 µH minimum, rated for the motor peak current and preferably magnetically shielded (toroidal, for example).
c) A good shielding can be obtained if the motor wires are running inside a metallic cable guide.

3.4.6.1 Differential Incremental Encoder #1 Connection

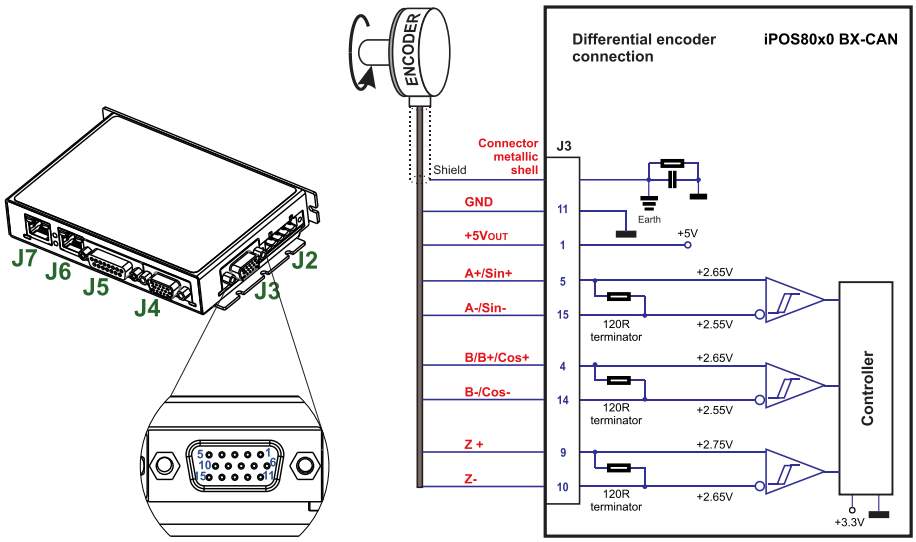

Figure 3.14. **Differential incremental encoder #1 connection**

Remarks:

1. *The encoder #2 input has internal terminators, equivalent to 120Ω (0.25W) , present in the drive.*
2. *The length of the cables must be up to 30m, reducing the exposure to voltage surges in industrial environment.*

3.4.6.2 Differential Incremental Encoder #2 Connection

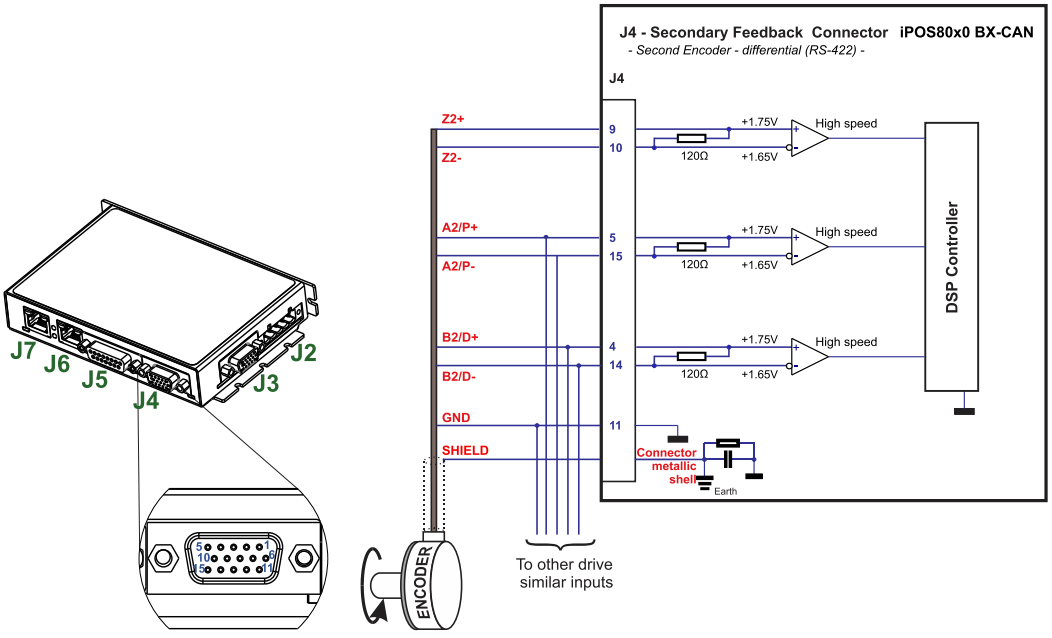

Figure 3.15. **Differential incremental encoder #2 connection**

Remarks:

1. *The encoder #2 input has internal terminators, equivalent to 120Ω (0.25W) , present in the drive.*
2. *The length of the cables must be up to 30m, reducing the exposure to voltage surges in industrial environment.*

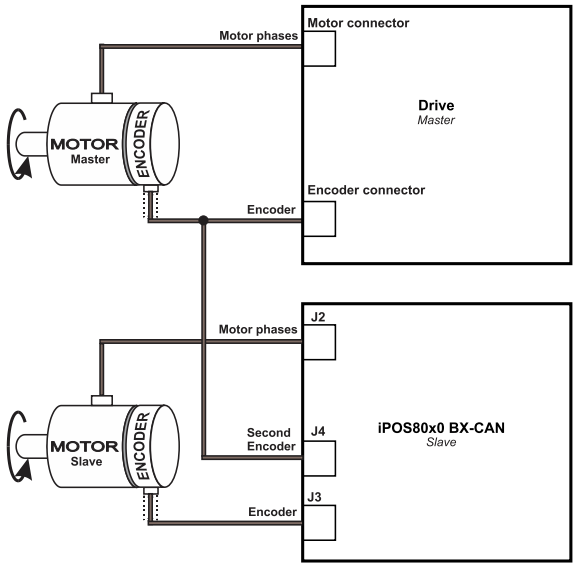

Figure 3.16. ***J4 – Master – Slave connection using encoder#2 input***

3.4.6.3 Pulse and direction connection

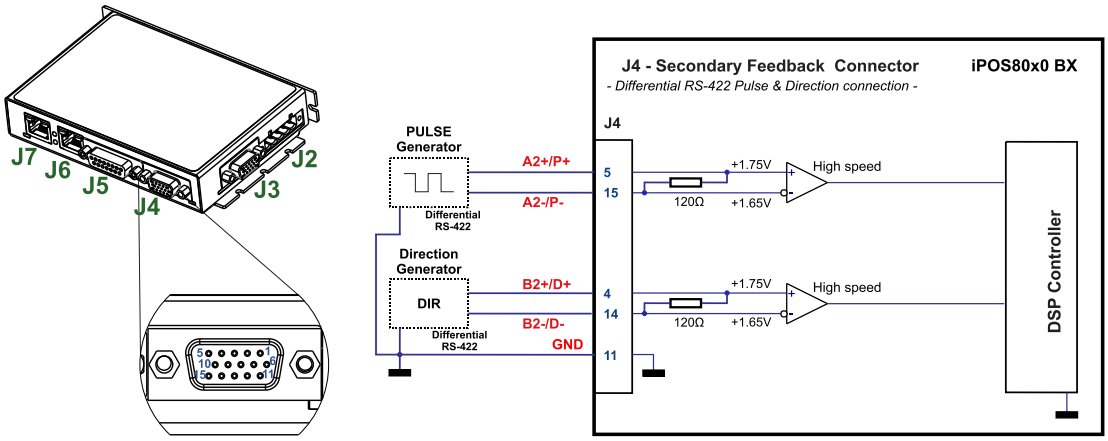

Figure 3.17. **Pulse and direction connection**

Remark: *the same pulse and direction connection can be done on J3 Encoder#1 using the same pin numbers as for Encoder#2*

3.4.6.4 Sine-Cosine Analog Encoder Connection

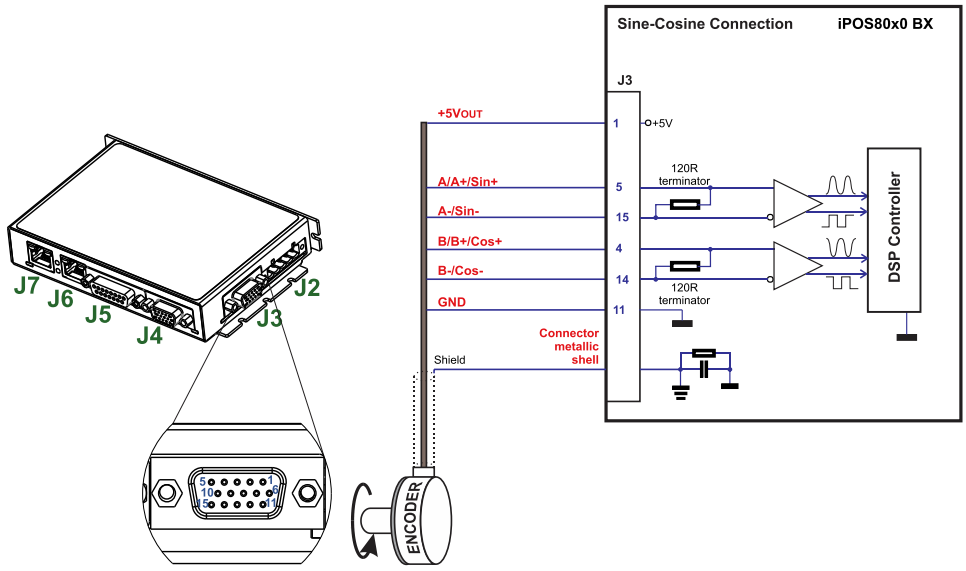

Figure 3.18. **Sine-Cosine analogue encoder connection**

Recommendations for wiring:

a) Always connect both positive and negative signals when the position sensor is differential and provides them. Use one twisted pair for each differential group of signals as follows: A+/Sin+ with A-/Sin-, B+/Cos+ with B-/Cos-, Z+ with Z-. Use another twisted pair for the 5V supply and GND.

b) If the iPOS80x0 5V supply output is used by another device (like for example an encoder) and the connection cable is longer than 5 meters, add a decoupling capacitor near the supplied device, between the +5V and GND lines. The capacitor value can be 1...10 µF, rated at 6.3V.

3.4.6.5 Digital Hall Connection for Motor + Hall + Incremental Encoder

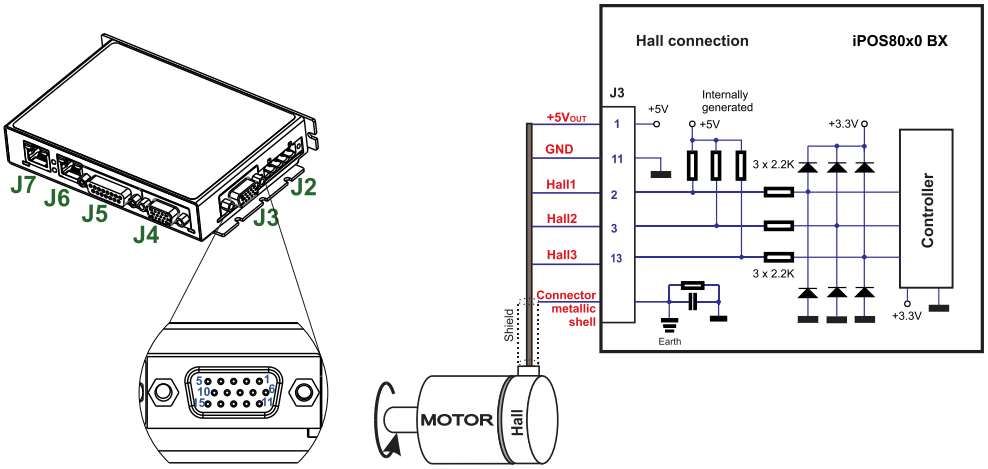

Figure 3.19. **Digital Hall connection**

Remarks:

1. *This connection is required when using Hall start method BLDC or PMSM and also for the Trapezoidal commutation method. The digital halls are not used in this case as a feedback measurement device. The actual motor control is done with an incremental encoder.*
2. *The length of the cables must be up to 30m, reducing the exposure to voltage surges in industrial environment.*

3.4.6.6 SSI Encoder #2 Connection

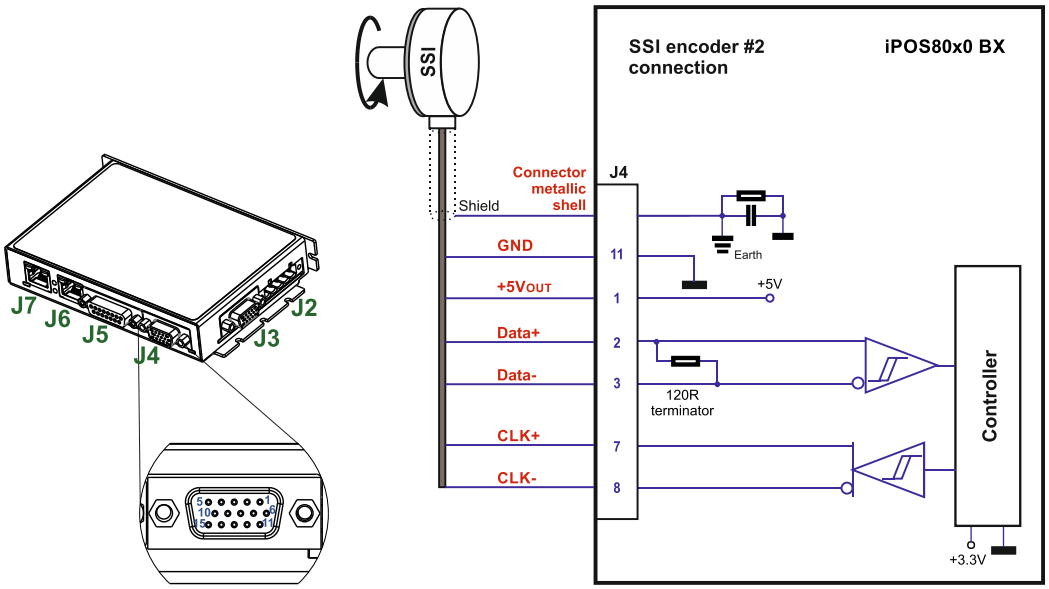

Figure 3.20. **SSI encoder #2 connection**

3.4.6.7 BiSS Encoder #2 Connection

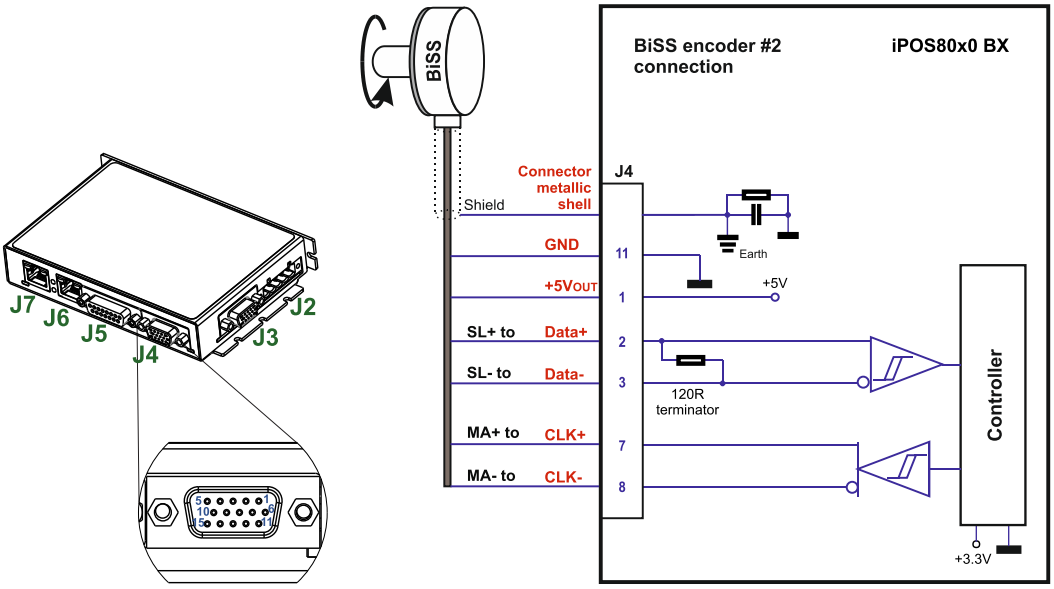

Figure 3.21. **BiSS-C encoder #2 connection**

Remarks:

1. *The encoder #2 input has an internal terminator between pins 2 and 3, equivalent to 120Ω (0.25W) , present in the drive.*
2. *The length of the cables must be up to 30m, reducing the exposure to voltage surges in industrial environment.*

3.4.7 Power Supply and STO Connection

3.4.7.1 Supply Connection

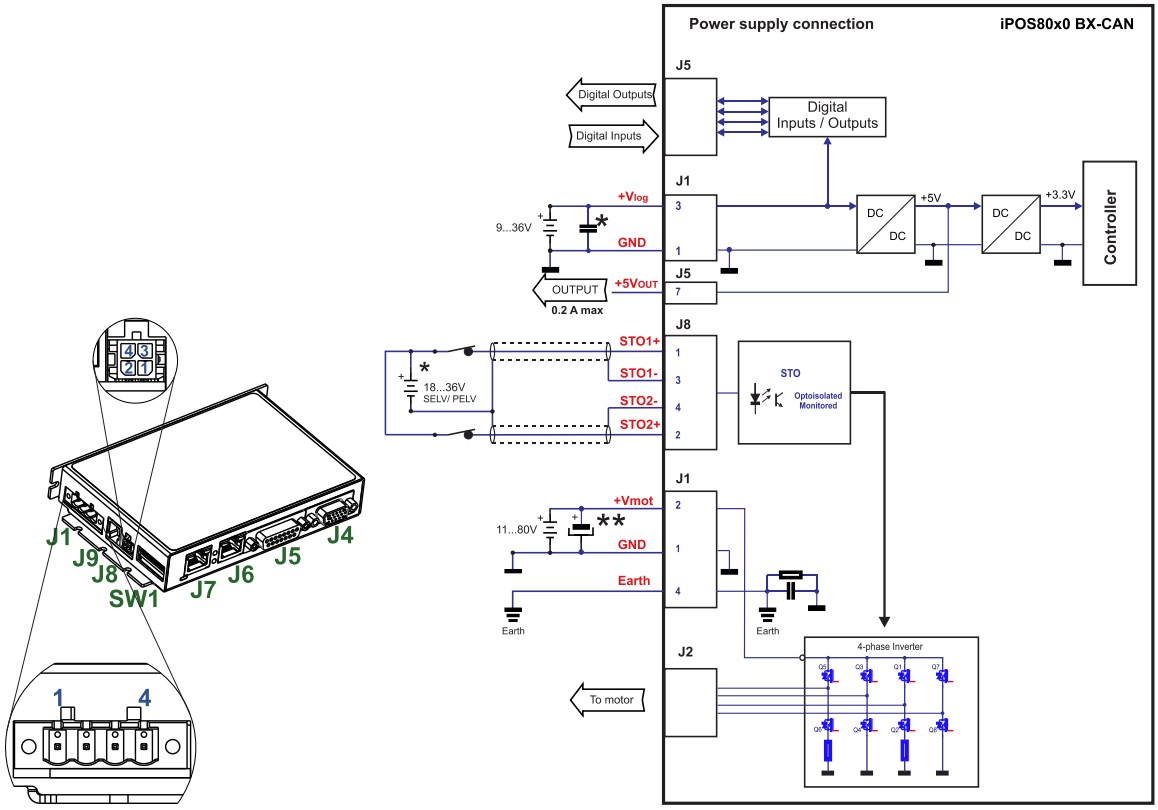

Figure 3.22. **Supply connection**

* For compliance to EMC surge immunity, an external capacitor must be added between +Vlog and GND. The capacitor shall be of 100µF minimum, rated for the logic supply voltage.

An external electrolytic capacitor may be added between +Vmot and GND, to help reduce over-voltage during load braking/ reversals. See paragraph **3.4.7.2 for details.

3.4.7.2 Recommendations for Supply Wiring

The iPOS80x0 BX always requires two supply voltages: Vlog and Vmot.

Use short, thick wires between the iPOS80x0 and the motor power supply. Connect power supply wires to all the indicated pins. If the wires are longer than 2 meters, use twisted wires for the supply and ground return. For wires longer than 20 meters, add a capacitor of at least 4,700µF (rated at an appropriate voltage) right on the terminals of the iPOS80x0.

It is recommended to connect the negative motor supply return (GND) to the Earth protection near the power supply terminals.

3.4.7.3 Recommendations to limit over-voltage during braking

During abrupt motion brakes or reversals the regenerative energy is injected into the motor power supply. This may cause an increase of the motor supply voltage (depending on the power supply characteristics). If the voltage bypasses 84V, the drive over-voltage protection is triggered and the drive power stage is disabled. In order to avoid this situation you have 2 options:

Option 1. Add a capacitor on the motor supply big enough to absorb the overall energy flowing back to the supply. The capacitor must be rated to a voltage equal or bigger than the maximum expected over-voltage and can be sized with the formula:

$$C \geq \frac{2 \times E_M}{U_{MAX}^2 - U_{NOM}^2}$$

where:

U_{MAX} = 84V is the over-voltage protection limit

U_{NOM} is the nominal motor supply voltage

E_M = the overall energy flowing back to the supply in Joules. In case of a rotary motor and load, E_M can be computed with the formula:

$$E_M = \underbrace{\frac{1}{2}(J_M + J_L)\varpi_M^2}_{\text{Kinetic energy}} + \underbrace{(m_M + m_L)g(h_{initial} - h_{final})}_{\text{Potential energy}} - \underbrace{3I_M^2 R_{Ph} t_d}_{\text{Copper losses}} - \underbrace{\frac{t_d \varpi_M}{2} T_F}_{\text{Friction losses}}$$

where:

J_M – total rotor inertia [kgm^2]

J_L – total load inertia as seen at motor shaft after transmission [kgm^2]

ϖ_M – motor angular speed before deceleration [rad/s]

m_M – motor mass [kg] – when motor is moving in a non-horizontal plane

m_L – load mass [kg] – when load is moving in a non-horizontal plane

g – gravitational acceleration i.e. 9.8 [m/s^2]

$h_{initial}$ – initial system altitude [m]

h_{final} – final system altitude [m]

I_M – motor current during deceleration [A_{RMS}/phase]

R_{Ph} – motor phase resistance [Ω]

t_d – time to decelerate [s]

T_F – total friction torque as seen at motor shaft [Nm] – includes load and transmission

In case of a linear motor and load, the motor inertia J_M and the load inertia J_L will be replaced by the motor mass and the load mass measured in [kg], the angular speed ϖ_M will become linear speed measured in [m/s] and the friction torque T_F will become friction force measured in [N].

Option 2. Connect a chopping resistor R_{CR} between phase CR / B- and ground, and activate the software option of dynamic braking (see below).

This option is not available when the drive is used with a step motor.

The chopping resistor option can be found in the Drive Setup dialogue within EasyMotion / EasySetup:

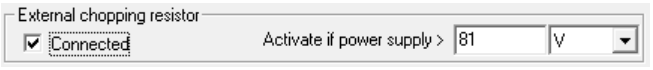

The chopping will occur when DC bus voltage increases over U_{CHOP}. This parameter (U_{CHOP}) should be adjusted depending on the nominal motor supply. Optimally (from a braking point of view), U_{CHOP} should be a few volts above the maximum nominal supply voltage. This setting will activate the chopping resistor earlier, before reaching dangerous voltages – when the over-voltage protection will stop the drive. Of course, U_{CHOP} must always be less than U_{MAX} – the over-voltage protection threshold.

Remark: *This option can be combined with an external capacitor whose value is not enough to absorb the entire regenerative energy E_M but can help reducing the chopping resistor size.*

Chopping resistor selection

The chopping resistor value must be chosen to respect the following conditions:

1. to limit the maximum current below the drive peak current I_{PEAK} = 20A (for 8010) and 40A (for 8020)

$$R_{CR} > \frac{U_{MAX}}{I_{PEAK}}$$

2. to sustain the required *braking power*:

$$P_{CR} = \frac{E_M - \frac{1}{2}C(U_{MAX}^2 - U_{CHOP}^2)}{t_d}$$

where C is the capacitance on the motor supply (external), i.e:

$$R_{CR} < \frac{U_{CHOP}^2}{2 \times P_{CR}}$$

3. to limit the average current below the drive nominal current I_{NOM}=20A (for 8010) and 20A (for 8020)

$$R_{CR} > \frac{P_{CR} \times t_d}{t_{CYCLE} \times I_{NOM}^2}$$

where t_{CYCLE} is the time interval between 2 voltage increase cycles in case of repetitive moves.

4. to be rated for an average power $P_{AV} = \frac{P_{CR} \times t_d}{t_{CYCLE}}$ and a peak power $P_{PEAK} = \frac{U_{MAX}^2}{R_{CR}}$

Remarks:

1. *If $\frac{U_{MAX}}{I_{PEAK}} > \frac{U_{CHOP}^2}{2 \times P_{CR}}$ the braking power P_{CR} must be reduced by increasing either t_d – the time to decelerate or C – the external capacitor on the motor supply*
2. *If $\frac{P_{CR} \times t_d}{t_{CYCLE} \times I_{NOM}^2} > \frac{U_{CHOP}^2}{2 \times P_{CR}}$ either the braking power must be reduced (see Remark 1) or t_{CYCLE} – the time interval between chopping cycles must be increased*

	**WARNING!**	***THE CHOPPING RESISTOR MAY HAVE HOT SURFACES DURING OPERATION.***

3.4.8 Serial RS-232 connection

3.4.8.1 Serial RS-232 connection

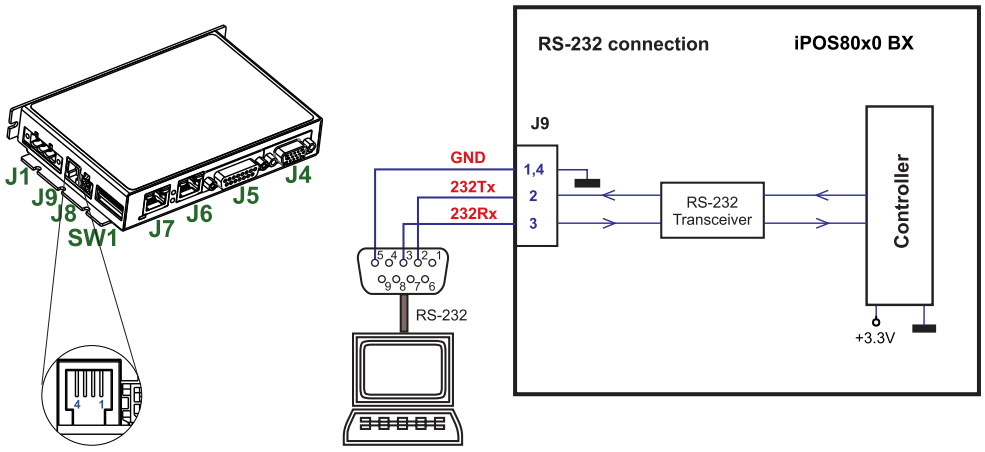

Figure 3.23. **Serial RS-232 connection**

3.4.8.2 Recommendation for wiring

a) If you build the serial cable, you can use a 3-wire shielded cable with shield connected to BOTH ends. Do not use the shield as GND. The ground wire (pin 1 or 4 of J9) must be included inside the shield, like the 232Rx and 232Tx signals. All metallic connector shells are connected internally to the Earth connector J1 pin 4.
b) Always power-off all the iPOS80x0 BX-CAN supplies before inserting/removing the RS-232 serial connector
c) Do not rely on an earthed PC to provide the iPOS80x0 GND connection! The drive must be earthed through a separate circuit. Most communication problems are caused by the lack of such connection



CAUTION! ***Do NOT CONNECT/DISCONNECT THE RS-232 CABLE WHILE THE DRIVE IS PWERED ON. THIS OPERATION CAN DAMAGE THE DRIVE***

3.4.9 CAN-bus connection (for CAN drives only)

3.4.9.1 CAN connection

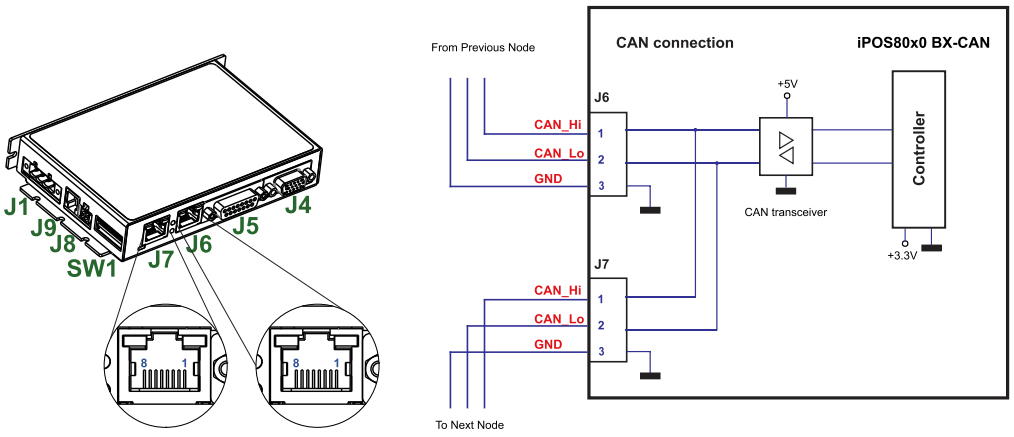

Figure 3.24. **CAN connection**

Remarks:

1. *The CAN network requires a 120-Ohm terminator. This is not included on the board.* ***Figure 3.25*** *shows how to connect it on your network*
2. *CAN signals are not insulated from other iPOS80x0 circuits.*

3.4.9.2 Recommendation for wiring

a) Build CAN network using cables with twisted wires (2 wires/pair), with CAN-Hi twisted together with CAN-Lo. It is recommended but not mandatory to use a shielded cable. If so, connect the shield to GND. The cable impedance must be 105 ... 135 ohms (120 ohms typical) and a capacitance below 30pF/meter.

b) The 120Ω termination resistors must be rated at 0.2W minimum. Do not use winded resistors, which are inductive.

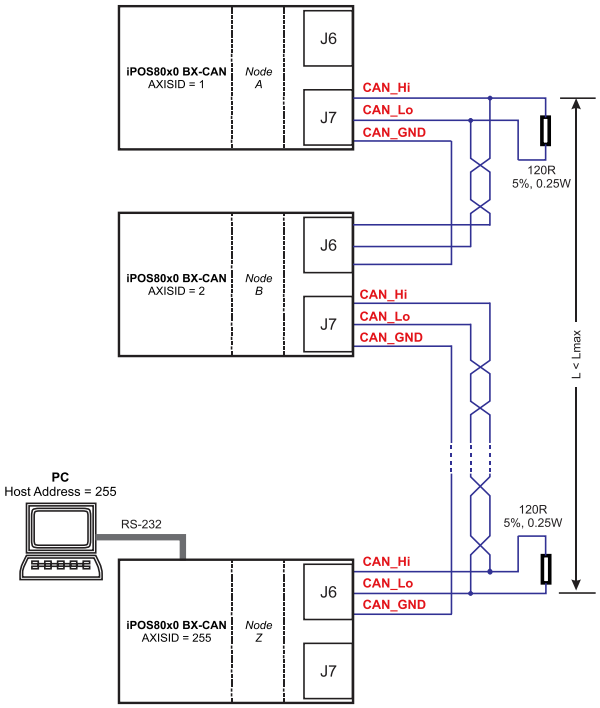

Figure 3.25. **Multiple-Axis CAN network**

3.4.10 Recommendations for EtherCAT Wiring (for CAT drives)

a) Build EtherCAT® network using UTP (unshielded twisted pair) cables rated CAT5E or higher (CAT6, etc.). Cables with this rating must have multiple characteristics, as described in TIA/EIA-568-B. Among these are: impedance, frequency attenuation, cross-talk, return loss, etc.

b) It is acceptable to use STP (shielded twisted pair) or FTP (foil twisted pair) cables, rated CAT5E or higher (CAT6, etc.). The added shielding is beneficial in reducing the RF (radio-frequency) emissions, improving the EMC emissions of the application.

c) The maximum length of each network segment must be less than 100 meters.

d) The network topology is daisy-chain. All connections are done using point-to-point cables. The global topology can be one of the two:

- Linear, when the J7 / OUT port of the last drive in the chain remains not connected. Master is connected to J6 / IN port of the first drive; J7 / OUT of the first drive is connected to J6 / IN of the following drive; J7 / OUT of the last drive remains unconnected.

  See ***Figure 3.27*** for a visual representation of the linear topology.

- Ring, when the J7 / OUT port of the last drive in the chain is connected back to the master controller, on the 2nd port of the master. This topology consists of the linear topology described above, plus an extra connection between the master, which has two RJ45 ports, to J7 / OUT of the last drive.

  See ***Figure 3.28*** for a visual representation of the ring topology.

e) Ring topology is preferred for its added security, since it is insensitive to one broken cable / connection along the ring (re-routing of communication is done automatically, so that to avoid the broken cable / connection)

f) It is highly recommended to use qualified cables, assembled by a specialized manufacturer. When using CAT5E UTP cables that are manufactured / commissioned / prepared on-site, it is highly recommended to check the cables. The check should be performed using a dedicated Ethernet cable tester, which verifies more parameters than simple galvanic continuity (such as cross-talk, attenuation, etc.). The activation of “Link” indicators will NOT guarantee a stable and reliable connection! This can only be guaranteed by proper quality of cables used, according to TIA/EIA-568-B specifications.

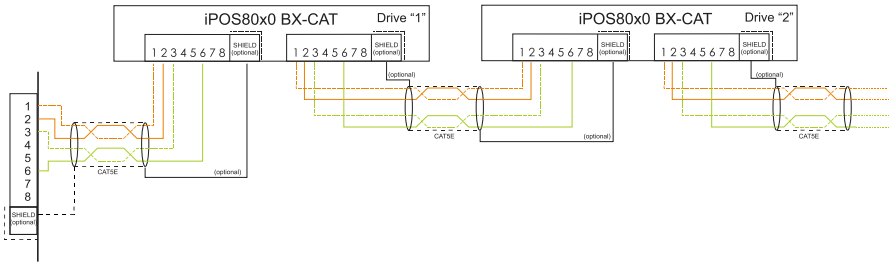

Figure 3.26. **EtherCAT wiring**

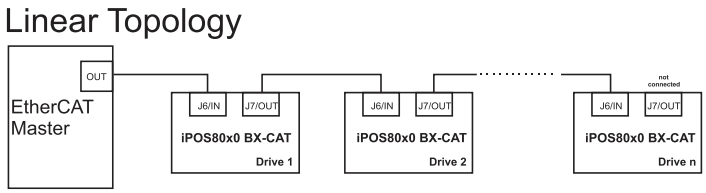

Figure 3.27. **EtherCAT network linear topology**

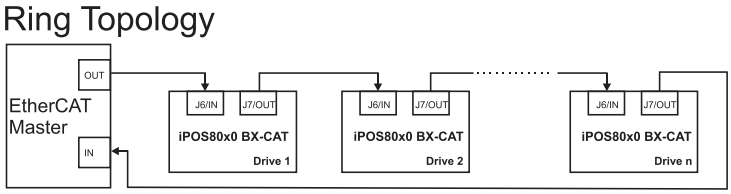

Figure 3.28. **EtherCAT network ring topology**

3.4.11 Disabling Autorun (for CAN drives); Disabling the setup table at startup (for CAT drives)

3.4.11.1 Disabling Autorun (for CAN drives)

When an iPOS80x0 BX-CAN is set in TMLCAN operation mode, by default after power-on it enters automatically in *Autorun* mode. In this mode, if the drive has in its local EEPROM a valid TML application (motion program), this is automatically executed as soon as the motor supply V_{MOT} is turned on.

In order to disable *Autorun* mode, there are 2 methods:

a) Software - by writing value 0x0001 in first EEPROM location at address 0x4000

b) Hardware1 – set the drive temporarily in CANopen mode. While in CANopen state, no motion will autorun. Set SW1 pin1 in down position.

c) Hardware2 – by temporary connecting all digital Hall inputs to GND, during the power-on for about 1 second, until the green LED is turned on, as shown in ***Figure 3.29***. This option is particularly useful when it is not possible to communicate with the drive.

After the drive is set in *non-Autorun/slave* mode using 2nd method, the 1st method may be used to invalidate the TML application from the EEPROM. On next power on, in absence of a valid TML application, the drive enters in the *non-Autorun/slave* mode independently of the digital Hall inputs status.

3.4.11.2 Disabling the setup table at startup (for CAT drives)

In some very rare cases, the setup table might be corrupted, leading to a loop where the drive resets continuously. This behavior can be noticed by seeing both the Ready and Error LED blinking for short periods of time continuously.

To recover from this behavior, the setup table can be invalidated by connecting all digital Hall inputs to GND, as shown in Figure ***3.29***.

On the next power on, the drive will load setup default settings and the Motion Error Register (MER) bit 2 will be 1. After a new valid setup table is loaded onto the drive, disconnect the hall sensors from GND and execute a new power off/ power on cycle.

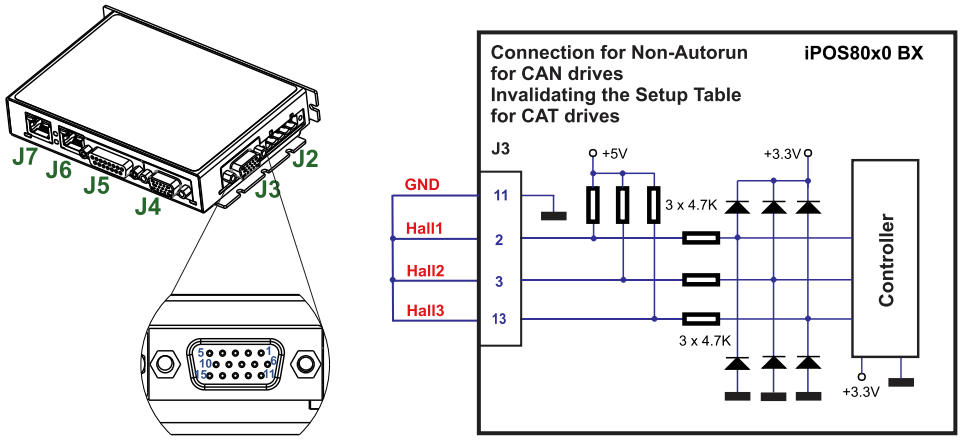

Figure 3.29. **Temporary connection during power-on to remove the drive from** Autorun **mode or disable Setup**

3.5 CAN Operation Mode and Axis ID Selection for CAN drives(SW1 settings)

The communication protocol as well as the Hardware Axis ID can be set by the SW1 switch.

ON = pin is down

OFF = in is up

The Operation mode is selected by the DIP switch pin1:

ON= CANopen mode / OFF= TMLCAN mode

The drive AxisID value is set after power on by:

- Software, setting via EasySetUp a specific AxisID value in the range 1-255.
- Hardware, by setting h/w in Easy setup and selecting a value between 1-127 from the switch SW1

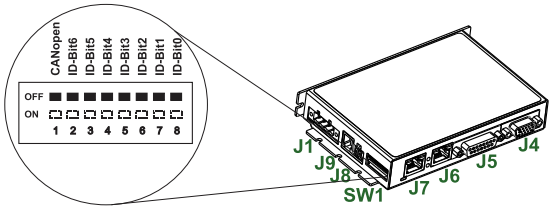

Figure 3.30. *SW1 – DIP Switch*

- Position 1: On = CANopen mode; Off = TMLCAN mode
- Positions 2 … 8: ID-Bitx.
- Axis ID switches The drive axis/address number is set when H/W is selected in Drive Setup under AxisID field or when the Setup is invalid.
- The axis ID is an 8 bit unsigned number. Its first 7 bits are controlled by the ID-bit0 to ID-bit6. Bit7 of this variable is always 0. In total, 127 axis ID HW values can result from the DIP switch combinations.

All pins are sampled at power-up, and the drive is configured accordingly.

If CANopen mode is selected and the AxisID is set to 255, the drive remains "non-configured" waiting for a CANopen master to configure it, using CiA-305 protocol. A "non-configured" drive answers only to CiA-305 commands. All other CANopen commands are ignored and transmission of all other messages (including boot-up) is disabled. The Ready (green) LED will flash at 1 second time intervals while in this mode

3.6 Axis ID Selection for CAT drives(J1 pin settings)

The iPOS80x0 BX-CAT drives support all EtherCAT standard addressing modes. In case of device addressing mode based on node address, the iPOS80x0 drive sets the *configured station alias* address with its AxisID value. The drive AxisID value is set after power on by:

- Software, setting via EasySetUp a specific AxisID value in the range 1-255.
- Hardware, by setting h/w in Easy setup under Axis ID value and selecting a value between 1-127 from switches 2-8

The Hardware Axis ID can be set by setting SW1 pins. SW1 is an 8 pole DIN switch.

ON = pin is down

OFF = in is up

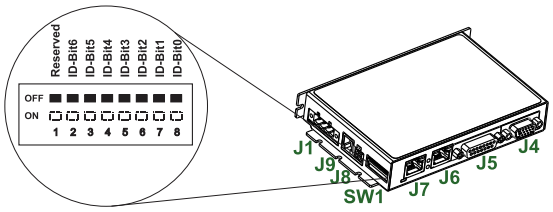

Figure 3.31. *J1 – Axis ID pins*

- **Pins 2 … 8**: ID-Bitx.
  - The drive axis/address number is set when H/W is selected in Drive Setup under AxisID field or when the Setup is invalid.
  - The axis ID is an 8 bit unsigned number. Its first 7 bits are controlled by the ID-bit0 to ID-bit6. Bit7 of this variable is always 0. In total, 127 axis ID HW values can result from the DIP switch combinations.
  - When pins 2..8 remain OFF, the drive Axis ID will be 255 and *configured station alias* will be 0.

All pins are sampled at power-up, and the drive is configured accordingly.

3.7 LED indicators

3.7.1 LEDs for CAN drives

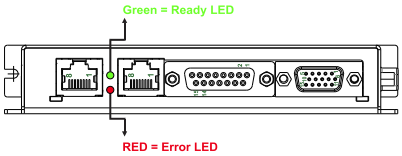

Figure 3.32. **LED indicators**

*Table 3.1 – **LED indicators***

LED no.	LED name	LED color	Function
1	Ready	green	Lit after power-on when the drive initialization ends. Turned off when an error occurs.
2	Error	red	Turned on when the drive detects an error condition or when OUT2/Error is set to +Vlog with OUT(2)=0 TML instruction.

3.7.2 LEDs for CAT drives

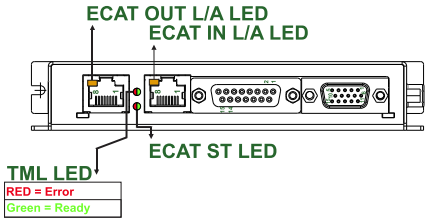

Figure 3.33. **LED indicators**

*Table 3.2 – **LED indicators***

LED no.	LED name	LED color	Function
1	TML LED	green	Lit after power-on when the drive initialization ends. Turned off when an error occurs.
		red	Turned on when the drive detects an error condition or when OUT2/Error is set to +Vlog with OUT(2)=0 TML instruction.
2	EtherCAT® ST	red and green	EtherCAT® ERROR and RUN indicators combined. Shows the state of the EtherCAT® Status Machine
3	EtherCAT® OUT Link/Activity	green	Shows the state of the physical link and activity.
4	EtherCAT® IN Link/Activity	green	Shows the state of the physical link and activity.

3.7.2.1 EtherCAT® ST LED indicator

The STATUS indicator displays the RUN states with a 180 degree phase shift to the ERROR states. An example is noted in ***Figure 3.34***.

In case of a conflict between turning the indicator on green versus red, the indicator shall be turned to red. Apart from this situation, the bi-color STATUS indicator combines the behavior of the RUN indicator specified in **Table** 3.3 and the behavior of the ERROR indicator specified in **Table 3.4**.

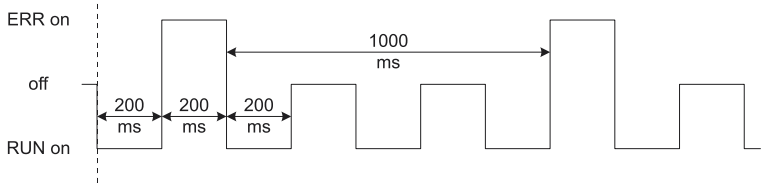

Figure 3.34. **STATUS indicator Example**

Table 3.3 – RUN Indicator States

Indicator states	Slave State	Description
Off	INITIALISATION	The drive is in state INIT
Blinking	PRE-OPERATIONAL	The drive is in state PRE-OEPRATIONAL
Single Flash	SAFE-OPERATIONAL	The drive is in state SAFE-OPERATIONAL
On	OPERATIONAL	The drive is in state OPERATIONAL

*Table 3.4 – **ERROR Indicator States***

ERR state	Error name	Description
On	Application controller failure	An critical communication or application controller error has occurred
Double Flash	Process Data Watchdog Timeout/ EtherCAT Watchdog Timeout	An application watchdog timeout has occurred.
Single Flash	Local Error	Slave device application has changed the EtherCAT state autonomously, due to local error (see ETG.1000 part 6 EtherCAT State Machine). Error Indicator bit is set to 1 in AL Status register.
Blinking	Invalid Configuration	General Configuration Error
Flickering	Booting Error	Booting Error was detected. INIT state reached, but Error Indicator bit is set to 1 in AL Status register
Off	No error	The EtherCAT communication of the device is in working condition

For a more detailed description of EtherCAT® LED functionalities please read ETG.1300 S (R) V1.0.1 available at www.EtherCAT.org

3.8 Electrical Specifications

All parameters measured under the following conditions (unless otherwise specified):

T_{amb} = 0…40°C, V_{LOG} = 24 V_{DC}; V_{MOT} = 80V_{DC}; Supplies start-up / shutdown sequence: -*any*-

Load current (sinusoidal amplitude / continuous BLDC,DC,stepper) = 10A iPOS8010; 20A iPOS8020

3.8.1 Operating Conditions

		Min.	Typ.	Max.	Units
Ambient temperature[1]		0		+40	ºC
Ambient humidity	Non-condensing	0		90	%Rh
Altitude / pressure[2]	Altitude (referenced to sea level)	-0.1	0 ÷ 2	2	Km
	Ambient Pressure	0 [2]	0.75 ÷ 1	10.0	atm

3.8.2 Storage Conditions

		Min.	Typ.	Max.	Units
Ambient temperature		-40		+85	ºC
Ambient humidity	Non-condensing	0		100	%Rh
Ambient Pressure		0		10.0	atm

3.8.3 Mechanical Mounting

		Min.	Typ.	Max.	Units
Airflow		natural convection[3], closed box			

3.8.4 Environmental Characteristics

			Min.	Typ.	Max.	Units
Size (Length x Width x Height)	Global size. iPOS80x0	without mating connectors	139 x 94.2 x 24.5			mm
			~5.47 x 3.7 x 0.97			inch
Weight		iPOS80x0 BX-CAN/CAT	250			g
Cleaning agents	Dry cleaning is recommended		Only Water- or Alcohol- based			
Protection degree	According to IEC60529, UL508		IP20			-

[1] Operating temperature at higher temperatures is possible with reduced current and power ratings

[2] iPOS80x0 can be operated in vacuum (no altitude restriction), but at altitudes over 2,500m, current and power rating are reduced due to thermal dissipation efficiency.

[3] In case of forced cooling (conduction or ventilation) the spacing requirements may drop down to mechanical tolerances as long as the ambient temperature is kept below the maximum operating limit

3.8.5 Logic Supply Input (+V_{LOG})

		Min.	Typ.	Max.	Units
Supply voltage	Nominal values	12	24	36	V_{DC}
	Absolute maximum values, drive operating but outside guaranteed parameters	8	24	40	V_{DC}
	Absolute maximum values, surge (duration ≤ 10ms) †	-1		+45	V
	+V_{LOG} = 12V		250		mA
	+V_{LOG} = 24V		150		
	+V_{LOG} = 40V		100		

3.8.6 Motor Supply Input (+V_{MOT})

			Min.	Typ.	Max.	Units
Supply voltage	Nominal values		12	80	90	V_{DC}
	Absolute maximum values, drive operating but outside guaranteed parameters		11		94	V_{DC}
	Absolute maximum values, surge (duration ≤ 10ms) †		-1		95	V
Supply current	Idle			1	5	mA
	Operating		-40	±20	+40	A
	Absolute maximum value, short-circuit condition (duration ≤ 10ms) †				45	A

3.8.7 Motor Outputs (A/A+, B/A-, C/B+, CR/B-)

			Min.	Typ.	Max.	Units
Nominal output current, continuous	for DC brushed, steppers and BLDC motors with Hall-based trapezoidal control	iPOS8010			10	A
		iPOS8020			20	
	for PMSM motors with FOC sinusoidal control (sinusoidal amplitude value)	iPOS8010			10	
		iPOS8020			20	
	for PMSM motors with FOC sinusoidal control (sinusoidal effective value)	iPOS8010			7.1	
		iPOS8020			14.2	
Motor output current, peak	maximum 2.5s	iPOS8010	-20		+20	A
		iPOS8020	-40		+40	
Short-circuit protection threshold			±22.5		±45	A
Short-circuit protection delay			5	10		µs
On-state voltage drop	Nominal output current; including typical mating connector contact resistance			±0.3	±0.5	V
Off-state leakage current				±0.5	±1	mA
Motor inductance (phase-to-phase)	Recommended value, for ripple ±5% of measurement range; +V_{MOT} = 80 V	F_{PWM} = 20 kHz	330			µH
		F_{PWM} = 40 kHz	150			
		F_{PWM} = 60 kHz	120			
	Absolute minimum value, limited by short-circuit protection; +V_{MOT} = 80 V	F_{PWM} = 20 kHz	120			µH
		F_{PWM} = 40 kHz	40			
		F_{PWM} = 60 kHz	30			
Motor electrical time-constant (L/R)	Recommended value, for ±5% current measurement error due to ripple	F_{PWM} = 20 kHz	250			µs
		F_{PWM} = 40 kHz	125			
		F_{PWM} = 60 kHz	100			
Current measurement accuracy	FS = Full Scale			±4	±8	%FS

3.8.8 Digital Inputs (IN0, IN1, IN2/LSP, IN3/LSN)[1]

		Min.	Typ.	Max.	Units
Mode compliance		PNP			
Default state	Input floating (wiring disconnected)	Logic LOW			
Input voltage	Logic “LOW”	-36	0	2.4	V
	Logic “HIGH”	7.5	24	36	
	Hysteresis	1.2	2.4	2.8	
	Floating voltage (not connected)		0		
	Absolute maximum, continuous	-36		+39	
	Absolute maximum, surge (duration ≤ 1s) †	-50		+50	
Input current	Logic “LOW”; Pulled to GND		0		mA
	Logic “HIGH”; Pulled to 24V		9	10	
		Min.	**Typ.**	**Max.**	**Units**
Mode compliance		NPN			
Default state	Input floating (wiring disconnected)	Logic HIGH			
Input voltage	Logic “LOW”	-36		2.2	V
	Logic “HIGH”	7.5		36	
	Hysteresis	1.2	2.4	2.8	
	Floating voltage (not connected)		23		
	Absolute maximum, continuous	-36		+39	
	Absolute maximum, surge (duration ≤ 1s) †	-50		+50	

[1] The digital inputs are software selectable as PNP or NPN

Input current	Logic “LOW”; Pulled to GND		8	10	mA
	Logic “HIGH”; Pulled to +24V	0	0	0.4	

Input frequency		0		150	kHz
Minimum pulse width		3.3			µs
ESD protection	Human body model	±2			kV

3.8.9 Digital Outputs (OUT0, OUT1, OUT2/Error, OUT3/ Ready)

			Min.	Typ.	Max.	Units
Mode compliance	All outputs (OUT0, OUT1, OUT2/Error, OUT3/Ready)		NPN 24V			
Default state	Not supplied (+V_{LOG} floating or to GND)		High-Z (floating)			
	Immediately after power-up	OUT0, OUT1	Logic “HIGH”			
		OUT2/Error, OUT3/ Ready	Logic “LOW”			
	Normal operation	OUT0, OUT1, OUT2/Error	Logic “HIGH”			
		OUT3/Ready	Logic “LOW”			
Output voltage	Logic “LOW”; output current = 2A for OUT0/ 0.5A for the other digital outputs				0.8	V
	Logic “HIGH”; output current = 0, no load	OUT2/Error, OUT3/ Ready	2.9	3	3.3	
		OUT0, OUT1	4	4.5	5	
	Logic “HIGH”, external load to +V_{LOG}			V_{LOG}		
	Absolute maximum, continuous		-0.5		V_{LOG}+0.5	
	Absolute maximum, surge (duration ≤ 1s) †		-1		V_{LOG}+1	
Output current	Logic “LOW”, sink current, continuous	OUT1, OUT2, OUT3			0.5	A
		OUT0			2	A
	Logic “HIGH”, source current; external load to GND; V_{OUT} >= 2.0V	OUT2/Error, OUT3/ Ready			2.5	mA
		OUT0, OUT1			7	mA
	Logic “HIGH”, leakage current; external load to +V_{LOG}; V_{OUT} = V_{LOG} max = 40V			0.05	0.7	mA
Minimum pulse width			0.5			µs
ESD protection	Human body model		±15			kV

3.8.10 Digital Hall Inputs (Hall1, Hall2, Hall3)

		Min.	Typ.	Max.	Units
Mode compliance		TTL / CMOS / Open-collector			
Default state	Input floating (wiring disconnected)	Logic HIGH			
Input voltage	Logic “LOW”		0	0.8	V
	Logic “HIGH”	1.8			
	Floating voltage (not connected)		4.5		
	Absolute maximum, surge (duration ≤ 1s) †	-10		+15	
Input current	Logic “LOW”; Pull to GND		5	3	mA
	Logic “HIGH”; Internal 1KΩ pull-up to +5	0	0	0	
Minimum pulse width		2			µs
ESD protection	Human body model	±5			kV

3.8.11 Encoder #1 Inputs (A1+, A1-, B1+, B1-, Z1+, Z1-,)

		Min.	Typ.	Max.	Units
Differential mode compliance	For full RS422 compliance, see [1]	TIA/EIA-422-A			
Input voltage, differential mode	Hysteresis	±0.06	±0.1	±0.2	V
	Differential mode	-14		+14	
	Common-mode range (A+ to GND, etc.)	-11		+14	
Input impedance, differential	A1+, A2+, B1+, B2+, Z1+, Z2+		2.2		kΩ
	A1-, A2-, B1-, B2-, Z1-, Z2-		1.6		
	Differential mode	0		10	MHz
	Differential mode	50			ns
ESD protection	Human body model	±1			kV

[1] All differential input pins have internal 120 Ω termination resistors connected across

3.8.12 Encoder #2 Inputs (A2+, A2-, B2+, B2-, Z2+, Z2-)[1]

		Min.	Typ.	Max.	Units
Differential mode compliance			TIA/EIA-422-A		
Input voltage, differential mode	Hysteresis	±0.06	±0.1	±0.2	V
	Differential mode	-14		+14	
	Common-mode range (A+ to GND, etc.)	-11		+14	
Input impedance, differential			120		Ω
	Differential mode	0		10	MHz
	Differential mode	50			ns
ESD protection	Human body model	±1			kV

3.8.13 Sin-Cos Encoder Inputs (Sin+, Sin-, Cos+, Cos-)[2]

		Min.	Typ.	Max.	Units
Input voltage, differential	Sin+ to Sin-, Cos+ to Cos-		1	1.25	V_{PP}
Input voltage, any pin to GND	Operational range	-1	2.5	4	V
	Absolute maximum values, continuous	-7		+7	
	Absolute maximum, surge (duration ≤ 1s) †	-11		+14	
Input impedance	Differential, Sin+ to Sin-, Cos+ to Cos-	4.2	4.7		kΩ
	Common-mode, to GND		2.2		kΩ
Resolution with interpolation	Software selectable, for one sine/cosine period	2		10	bits
Frequency	Sin-Cos interpolation	0		450	kHz
	Quadrature, no interpolation	0		10	MHz
ESD protection	Human body model	±2			kV

3.8.14 SSI encoder interface

		Min.	Typ.	Max.	Units
Differential mode compliance (CLOCK, DATA) [1]			TIA/EIA-422		
CLOCK Output voltage	Differential; 50Ω differential load	2.0	2.5	5.0	V
	Common-mode, referenced to GND	2.3	2.5	2.7	
CLOCK frequency	Software selectable		1000, 2000, 3000		kHz
DATA Input hysteresis	Differential mode	±0.1	±0.2	±0.5	V
Data input impedance	Termination resistor on-board		120		Ω
DATA Input common mode range	Referenced to GND	-7		+12	V
	Absolute maximum, surge (duration ≤ 1s) †	-25		+25	
DATA format	Software selectable		Binary / Gray		
			Single-turn / Multi-turn		
			Counting direction		
DATA resolution	Total resolution (single turn or single turn + multi turn)			56	bit

Single-turn frame

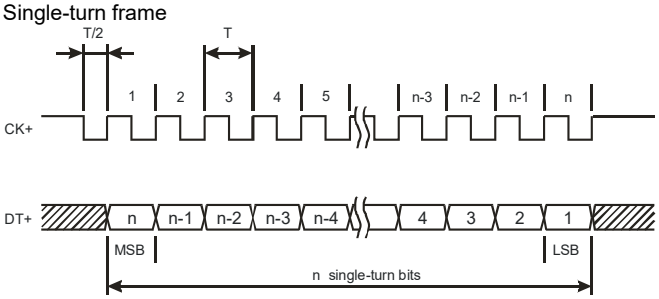

CK- and DT- signals have the same form with CK+ and DT+, but with opposite polarity.

Multi-turn frame

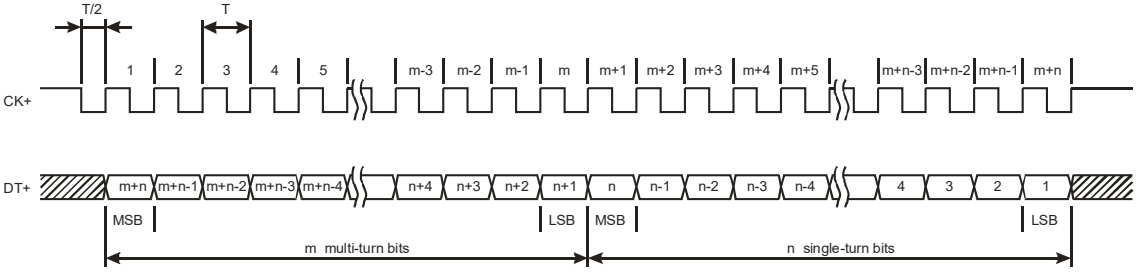

CK- and DT- signals have the same form with CK+ and DT+, but with opposite polarity.

[1] Encoder #2 differential input pins have internal 120Ω termination resistors connected across

[2] For many applications, a termination resistor should be connected across SIN+ to SIN-, and across COS+ to COS-. This can be achieved by setting SW3 pins 3,4 and 5 to ON. Please consult the feedback device datasheet for confirmation.

3.8.15 BiSS Encoder Interface

		Min.	Typ.	Max.	Units
Differential mode compliance (CLOCK, DATA)		TIA/EIA-422			
CLOCK Output voltage	Differential; 50Ω differential load	2.0	2.5	5.0	V
	Common-mode, referenced to GND	2.3	2.5	2.7	
CLOCK frequency	Software selectable	1000, 2000, 3000, 4000			kHz
DATA Input hysteresis	Differential mode	±0.1	±0.2	±0.5	V
Data input impedance	Termination resistor on-board		120		Ω
DATA Input common mode range	Referenced to GND	-7		+12	V
	Absolute maximum, surge (duration ≤ 1s) †	-25		+25	
	Software selectable	Single-turn / Multi-turn			
		Counting direction			
DATA resolution	Total resolution (single turn or single turn + multi turn)			56	bit
Protocol		BiSS C mode (sensor mode)			

3.8.16 Analog 0…5V Inputs (REF, FDBK)

		Min.	Typ.	Max.	Units
Input voltage	Operational range	0		5	V
	Absolute maximum values, continuous	-0.5		+9.5	
	Absolute maximum, surge (duration ≤ 1s) †	-1		±10	
Input impedance	To GND		10		kΩ
Resolution			12		bits
Integral linearity				±4	LSB
Differential Linearity	No missing codes			±1	LSB
Offset error				200	mV
Gain error			±1%	±3%	% FS[1]
Bandwidth (-3dB)	Software selectable	0		600	Hz
ESD protection	Human body model	±2			kV

3.8.17 Analog ±10V Input (REF)

		Min.	Typ.	Max.	Units
Differential voltage range			±10		V
Common-mode voltage range	Referenced to GND	-12	0…10	+50	V
Input impedance	Differential		40		kΩ
Common-mode impedance	Referenced to GND		20		kΩ
Resolution			12		bits
Integral linearity				±4	LSB
Differential Linearity	No missing codes			±1	LSB
Offset error	Common-mode voltage = 0…10 V			1	V
Gain error	Common-mode voltage = 0…10 V		±10	±12	%FS[2]
Bandwidth (-3dB)	Depending on software settings		600		Hz

3.8.18 RS-232

		Min.	Typ.	Max.	Units
Standards compliance		TIA/EIA-232-C			
Bit rate	Depending on software settings	9600		115200	Baud
Short-circuit protection	232TX short to GND	Guaranteed			
ESD protection	Human body model	±2			kV

3.8.19 CAN-Bus (for CAN drives)

		Min.	Typ.	Max.	Units
Compliance		ISO11898, CiA-301v4.2, CiA 305 v2.2.13, 402v4.1.1			
Bit rate	Software selectable	125		1000	125
Bus length	1Mbps			25	m
	500Kbps			100	
	≤ 250Kbps			250	
Resistor	Between CAN-Hi, CAN-Lo	none on-board			
Node addressing	Hardware: by H/W pins	1 ÷ 127 & 255 (LSS non-configured) (CANopen); 1-127 & 255 (TMLCAN)			
	Software	1 ÷ 127 (CANopen); 1- 255 (TMLCAN)			
Voltage, CAN-Hi or CAN-Lo to GND		-26		26	V
ESD protection	Human body model	±15			kV

[1] "FS" stands for "Full Scale"

3.8.20 Supply Output (+5V)

			Min.	Typ.	Max.	Units
+5V output voltage	Current sourced = 250mA		4.8	5	5.2	V
+5V output current		iPOS80x0 BX-CAN	600	650		mA
		iPOS80x0 BX-CAT	350	400		
Short-circuit protection			Yes			
Over-voltage protection			NOT protected			
ESD protection	Human body model		±2			kV

3.8.21 EtherCAT ports J6 and J7 (for CAT drives)

		Min.	Typ.	Max.	Units
Standards compliance		IEEE802.3, IEC61158			
Transmission line specification	According to TIA/EIA-568-5-A	Cat.5e.UTP			
J5, J6 pinout	EtherCAT® supports MDI/MDI-X auto-crossover	TIA/EIA-568-A or TIA/EIA-568-B			
Software protocols compatibility		CoE, CiA402, IEC61800-7-301			
Node addressing	By software, via EasySetup	1 ÷ 255			-
	By hardware via hex sw1 and sw2	1 ÷ 127			-
MAC addressing	EtherCAT® uses no MAC address	none			-
ESD protection	Human body model	±15			kV

3.8.22 Safe Torque OFF (STO1+; STO1-; STO2+; STO2-)

		Min.	Typ.	Max	Units
Safety function	According to EN61800-5-2	STO (Safe Torque OFF)			
EN 61800-5-1/ -2 and EN 61508-5-3/ -4 Classification	Safety Integrity Level	safety integrity level 3 (SIL3)			
	PFHd (Probability of Failures per Hour - dangerous)	$8*10^{-10}$	$hour^{-1}$ (0.8 FIT)		
EN13849-1 Classification	Performance Level	Cat3/PLe			
	MTTFd (meantime to dangerous failure)	377	years		
Mode compliance		PNP			
Default state	Input floating (wiring disconnected)	Logic LOW			
Input voltage	Logic “LOW” (PWM operation disabled)	-20		5.6	V
	Logic “HIGH” (PWM operation enabled)	18		36	
	Absolute maximum, continuous	-20		+40	
Input current	Logic “LOW”; pulled to GND		0		mA
	Logic “HIGH”, pulled to +Vlog		5	13	
Repetitive test pulses (high-low-high)	Ignored high-low-high			5	ms
				20	Hz
Fault reaction time	From internal fault detection to register DER bit 14 =1 and OUT2/Error high-to-low			30	ms
PWM operation delay	From external STO low-high transition to PWM operation enabled			30	ms
ESD protection	Human body model	±2			kV

3.8.23 Conformity

		Min.	Typ.	Max.	Units
EU Declaration		2014/30/EU (EMC), 2014/35/EU (LVD), 2011/65/EU (RoHS), 1907/2006/EC (REACH), 93/68/EEC (CE Marking Directive), EC 428/2009 (non dual-use item, output frequency limited to 590Hz)			

† Stresses beyond values listed under “absolute maximum ratings” may cause permanent damage to the device. Exposure to absolute-maximum-rated conditions for extended periods may affect device reliability.

3.8.24 De-rating graphs

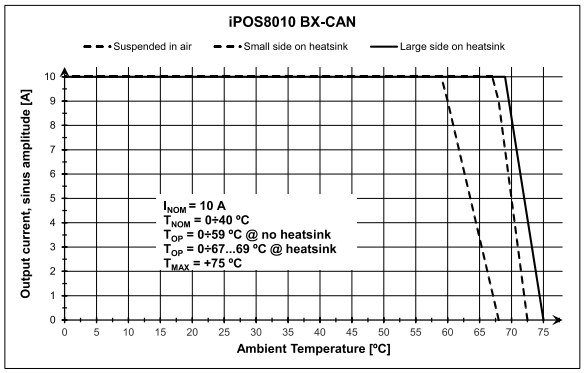

Figure 3.35 iPOS8010 BX-CAN De-rating with ambient temperature

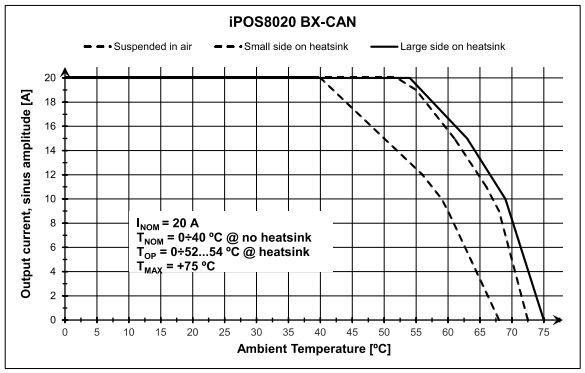

***Figure 3.36** iPOS8020 BX-CAN De-rating with ambient temperature*

TBD - iPOS8010 BX-CAT De-rating with ambient temperature

TBD - iPOS8020 BX-CAT De-rating with ambient temperature

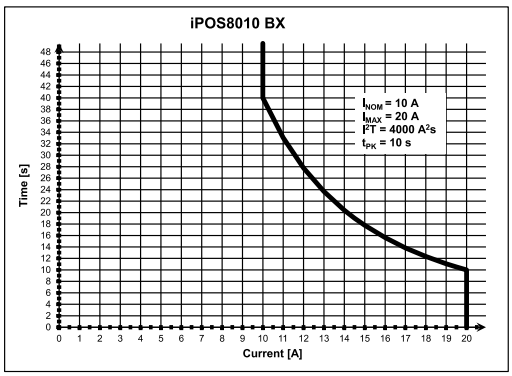

***Figure 3.37** iPOS8010 BX-CAN/CAT Over-current diagram*

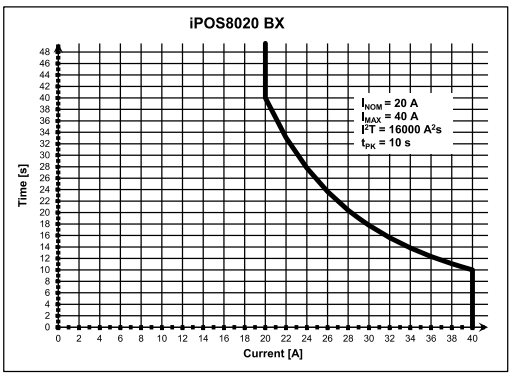

***Figure 3.38** iPOS8020 BX-CAN/CAT Over-current diagram*

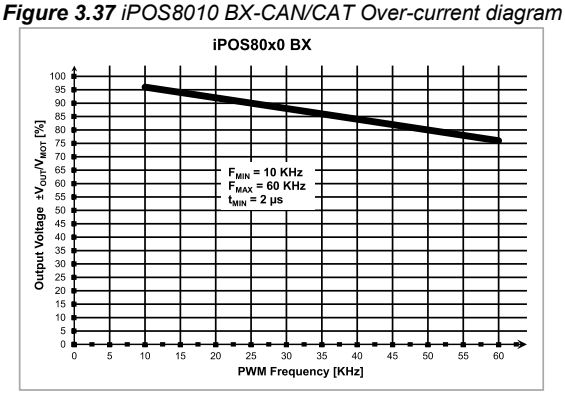

***Figure 3.39.** iPOS80x0 BX-CAN/CAT Output Voltage De-rating with PWM frequency[1]*

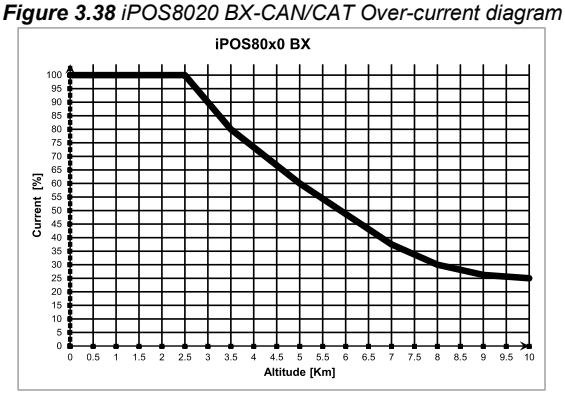

***Figure 3.40.** iPOS80x0 BX-CAN/CAT De-rating with altitude*

CAUTION!

FOR PWM FREQUENCIES LESS THAN 20 KHZ, CORRELATE THE PWM FREQUENCY WITH THE MOTOR PARAMETERS IN ORDER TO AVOID POSSIBLE MOTOR DAMAGE.

[1] V_{OUT} – the output voltage, V_{MOT} – the motor supply voltage

4 Memory Map

iPOS80x0 BX has 2 types of memory available for user applications: 16K×16 SRAM and up to 16K×16 serial E²ROM.

The SRAM memory is mapped in the address range: C000h to FFFFh. It can be used to download and run a TML program, to save real-time data acquisitions and to keep the cam tables during run-time.

The E²ROM is mapped in the address range: 4000h to 7FFFh. It is used to keep in a non-volatile memory the TML programs, the cam tables and the drive setup information.

Remark: *EasyMotion Studio handles automatically the memory allocation for each motion application. The memory map can be accessed and modified from the main folder of each application*

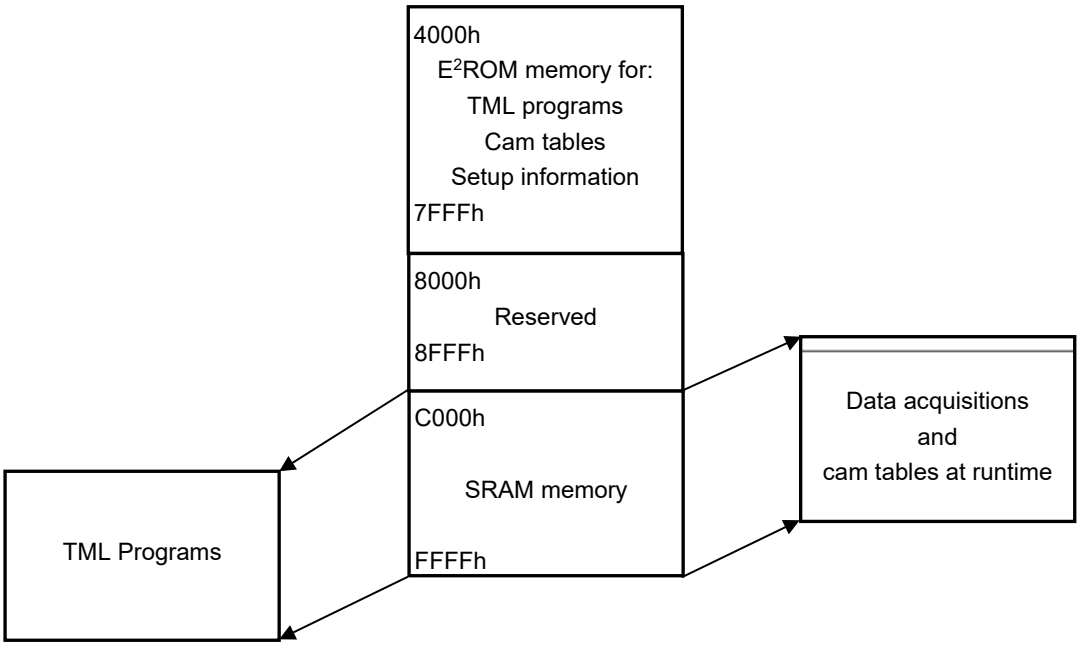

Figure 7.1. *iPOS80x0 BX Memory Map*