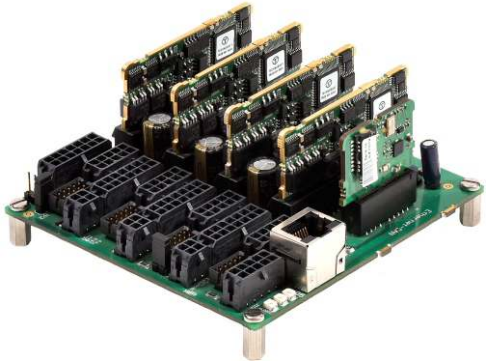

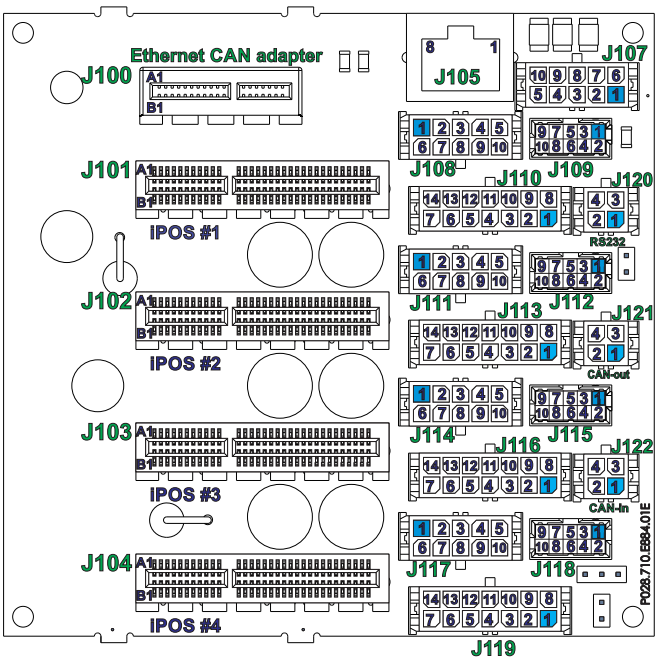

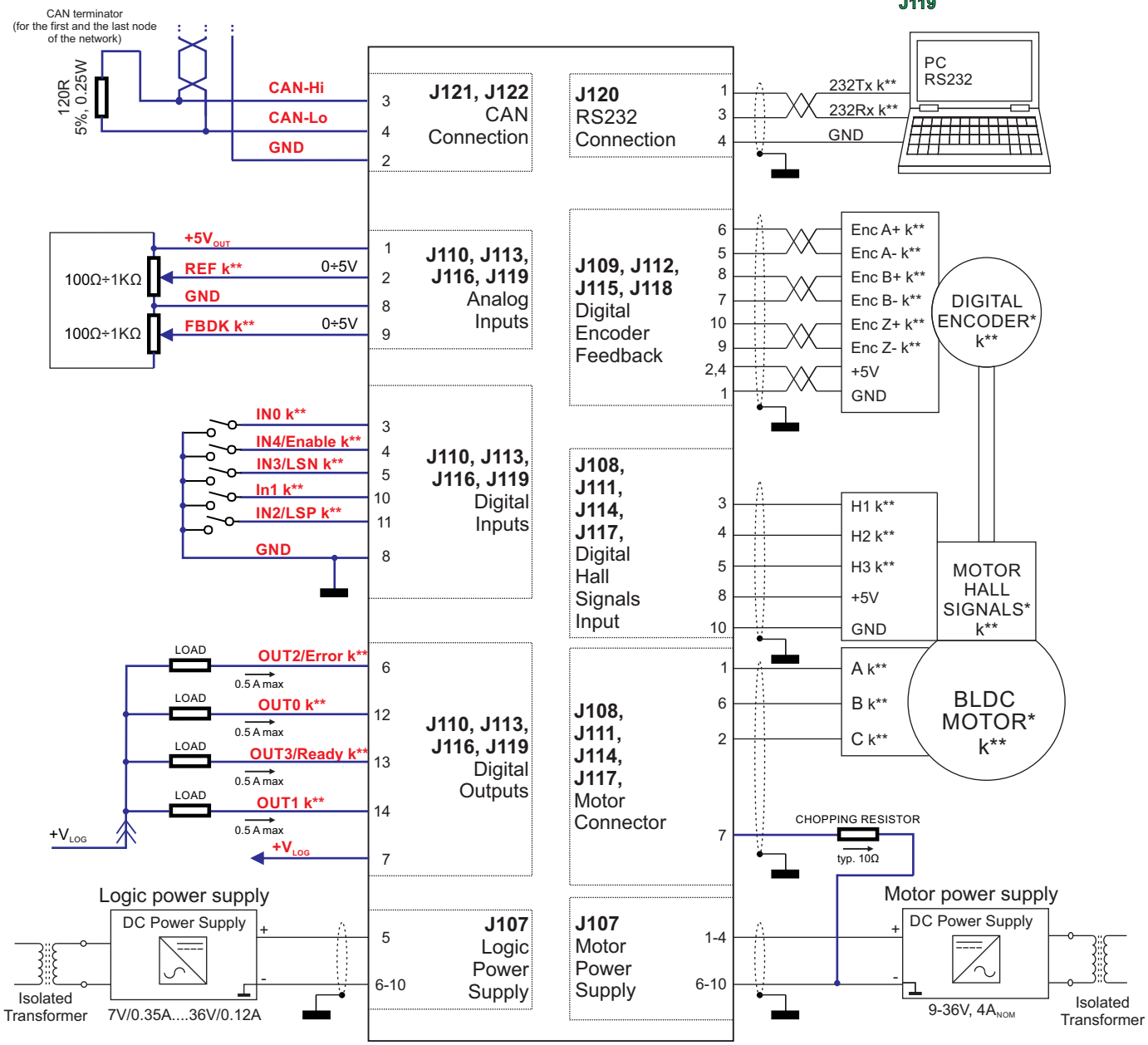

* FOR ALL AVAILABLE OPTIONS CHECK THE USER MANUAL OF THE DRIVE
** k = 1, 2, 3, 4 and represents the number of the iPOS360x at which the connection is made

iPOS360x SX-CAN	P/N:P028.002.E884

Copyright © Technosoft 2021. All rights reserved.

Title: **iPOS360x SX-CAN - Electrical Connection Diagram**

Size	Document Number:	Author:	Rev
A4	P091.028.SX.CDG.0221	ALN	B

Date: 0221 | Sheet 1 of 1