iPOS2401 MX-CAN / CAT

Intelligent Servo Drive for Step, DC, Brushless DC and AC Motors

TECHNOSOFT

Intelligent Servo Drives

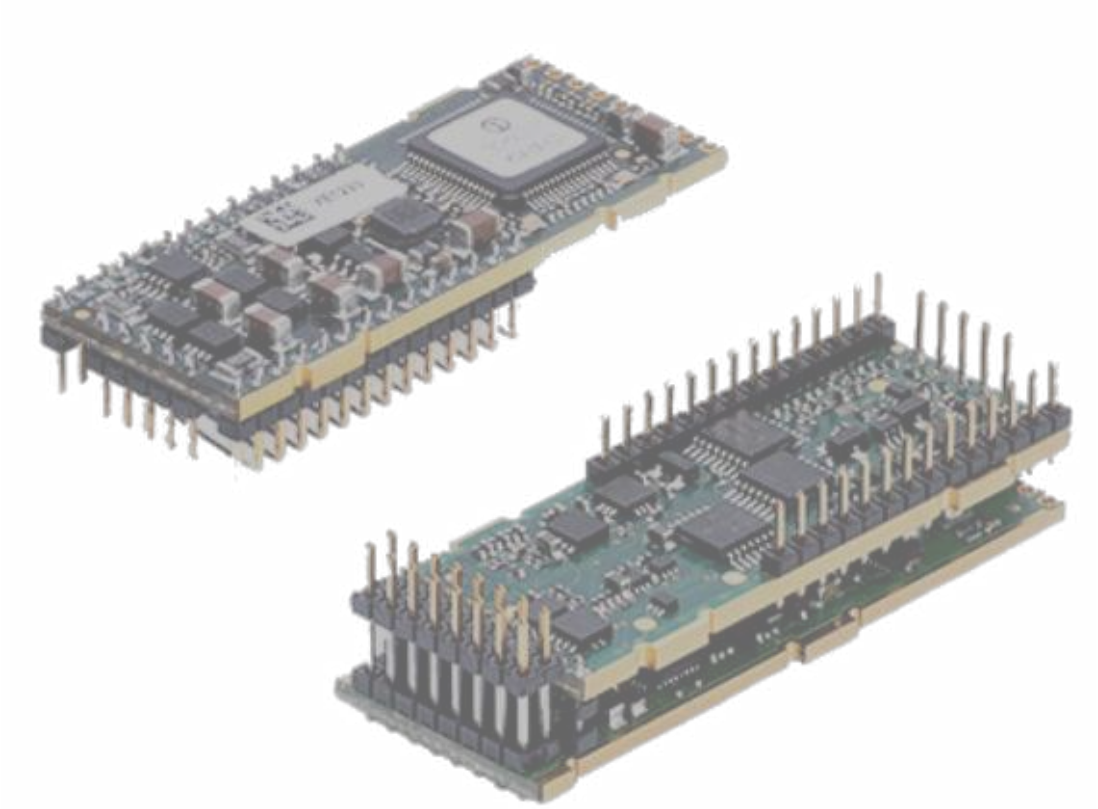

Technical Reference

© Technosoft 2023

P091.024.iPOS2401.MX.CAN.CAT.UM.0623

Read This First

Whilst Technosoft believes that the information and guidance given in this manual is correct, all parties must rely upon their own skill and judgment when making use of it. Technosoft does not assume any liability to anyone for any loss or damage caused by any error or omission in the work, whether such error or omission is the result of negligence or any other cause. Any and all such liability is disclaimed.

All rights reserved. No part or parts of this document may be reproduced or transmitted in any form or by any means, electrical or mechanical including photocopying, recording or by any information-retrieval system without permission in writing from Technosoft S.A.

The information in this document is subject to change without notice.

About This Manual

This book is a technical reference manual for:

Product Name	Part Number	Description
iPOS2401 MX-CAN	P024.300.E101	Standard version, CAN
iPOS2401 MX-CAT	P024.200.E121	Standard version, EtherCAT

In order to operate the **iPOS2401** drives, you need to pass through 3 steps:

- ❑ **Step 1 Hardware installation**
- ❑ **Step 2 Drive setup** using Technosoft **EasySetUp** software for drive commissioning
- ❑ **Step 3 Motion programming** using one of the options:
  - ❑ A **CANopen master**[1] or an **EtherCAT® master**[2]
  - ❑ The drives **built-in motion controller** executing a Technosoft Motion Language (**TML**) program developed using Technosoft **EasyMotion Studio** software
  - ❑ A **TML_LIB motion library for PCs** (Windows or Linux) [3]
  - ❑ A **TML_LIB motion library for PLCs** [3]
  - ❑ A **distributed control** approach which combines the above options, like for example a host calling motion functions programmed on the drives in TML

This manual covers **Step 1** in detail. It describes the **iPOS2401** hardware including the technical data, the connectors and the wiring diagrams needed for installation.

For Step 2 and 3, please consult the document **EasyMotion Studio – Quick Setup and Programming Guide**. For detailed information regarding the next steps, refer to the related documentation.

Notational Conventions

This document uses the following conventions:

- **iPOS2401**– all products described in this manual
- **IU units** – Internal units of the drive
- **SI units** – International standard units (meter for length, seconds for time, etc.)
- **STO** – Safe Torque Off
- **TML** – Technosoft Motion Language
- **CANopen** – Standard communication protocol that uses 11-bit message identifiers over CAN-bus
- **TMLCAN** – Technosoft communication protocol for exchanging TML commands via CAN-bus, using 29bit message identifiers
- **CoE** – CAN application protocol over EtherCAT®

Trademarks

EtherCAT® is registered trademark and patented technology, licensed by Beckhoff Automation GmbH, Germany.

[1] when the iPOS2401 MX-CAN is set in CANopen mode

[2] when using and iPOS2401 MX-CAT

[3] available only for CAN versions

iPOS2401 MX-CAN Datasheet (P024.300.E101.DSH)

– describes the hardware connections of the iPOS2401 MX CAN family of intelligent servo drives including the technical data and connectors.

iPOS2401 MX-CAT Datasheet (P024.200.E121.DSH)

– describes the hardware connections of the iPOS2401 MX EtherCAT® family of intelligent servo drives including the technical data and connectors.

EasyMotion Studio – Quick Setup and Programming Guide (P091.034.ESM-Quick.Setup.and.Programming.Guide.UM.xxxx) – describes the compatible software installation, drive software setup commissioning, introduction to TML motion programming and motion evaluation tools.

Help of the EasySetUp software – describes how to use **EasySetUp** to quickly setup any Technosoft drive for your application using only 2 dialogues. The output of EasySetUp is a set of setup data that can be downloaded into the drive EEPROM or saved on a PC file. At power-on, the drive is initialized with the setup data read from its EEPROM. With EasySetUp it is also possible to retrieve the complete setup information from a drive previously programmed. **EasySetUp can be downloaded free of charge from Technosoft web page**

iPOS CANopen Programming **(part no. P091.063.iPOS.UM.xxxx)** – explains how to program the iPOS family of intelligent drives using **CANopen** protocol and describes the associated object dictionary for **CiA 301 v.4.2** application layer and communication profile and **CiA DSP 402 v3.0** device profile for drives and motion control now included in IEC 61800-7-1 Annex A, IEC 61800-7-201 and IEC 61800-7-301 standards

CoE Programming **(part no. P091.064.UM.xxxx)** – explains how to program the Technosoft intelligent drives using **CAN application protocol over EtherCAT®** and describes the associated object dictionary.

Motion Programming using EasyMotion Studio (part no. P091.034.ESM.UM.xxxx) – describes how to use the EasyMotion Studio to create motion programs using in Technosoft Motion Language (TML). EasyMotion Studio platform includes **EasySetUp** for the drive/motor setup, and a **Motion Wizard** for the motion programming. The Motion Wizard provides a simple, graphical way of creating motion programs and automatically generates all the TML instructions. *With EasyMotion Studio you can fully benefit from a key advantage of Technosoft drives – their capability to execute complex motions without requiring an external motion controller, thanks to their built-in motion controller.* **A demo version of EasyMotion Studio (with EasySetUp part fully functional) can be downloaded free of charge from the Technosoft web page**

TML_LIB v2.0 **(part no. P091.040.v20.UM.xxxx)** – explains how to program in **C, C++,C#, Visual Basic or Delphi Pascal** a motion application for the Technosoft intelligent drives using TML_LIB v2.0 motion control library for PCs. The TML_lib includes ready-to-run examples that can be executed on **Windows** or **Linux** (x86 and x64).

TML_LIB_LabVIEW v2.0 **(part no. P091.040.LABVIEW.v20.UM.xxxx)** – explains how to program in **LabVIEW** a motion application for the Technosoft intelligent drives using TML_LIB_Labview v2.0 motion control library for PCs. The TML_Lib_LabVIEW includes over 40 ready-to-run examples.

TML_LIB_S7 **(part no. P091.040.S7.UM.xxxx)** – explains how to program in a PLC **Siemens series S7-300 or S7-400** a motion application for the Technosoft intelligent drives using TML_LIB_S7 motion control library. The TML_LIB_S7 library is **IEC61131-3 compatible**.

TML_LIB_CJ1 **(part no. P091.040.CJ1.UM.xxxx)** – explains how to program in a PLC **Omron series CJ1** a motion application for the Technosoft intelligent drives using TML_LIB_CJ1 motion control library for PLCs. The TML_LIB_CJ1 library is **IEC61131-3 compatible**.

TML_LIB_X20 **(part no. P091.040.X20.UM.xxxx)** – explains how to program in a PLC **B&R series X20** a motion application for the Technosoft intelligent drives using TML_LIB_X20 motion control library for PLCs. The TML_LIB_X20 library is **IEC61131-3 compatible**.

TechnoCAN **(part no. P091.063.TechnoCAN.UM.xxxx)** – presents TechnoCAN protocol – an extension of the CANopen communication profile used for TML commands

IO-iPOS2401 (part no. P091.024.IO-iPOS2401.UM.xxxx) – describes the IO iPOS360x I/O extension board included in the **iPOS2401** Starter Kits.

If you Need Assistance …

If you want to …	Contact Technosoft at …
Visit Technosoft online	World Wide Web: http://www.technosoftmotion.com/
Receive general information or assistance (see Note)	World Wide Web: http://www.technosoftmotion.com/ Email: sales@technosoftmotion.com
Ask questions about product operation or report suspected problems (see Note)	Tel: +41 (0)32 732 5500 Email: support@technosoftmotion.com
Make suggestions about, or report errors in documentation.	Mail: Technosoft SA Avenue des Alpes 20 CH-2000 Neuchatel, NE Switzerland

1 Safety information

Read carefully the information presented in this chapter before carrying out the drive installation and setup! It is imperative to implement the safety instructions listed hereunder.

This information is intended to protect you, the drive and the accompanying equipment during the product operation. Incorrect handling of the drive can lead to personal injury or material damage.

The following safety symbols are used in this manual:

WARNING!	***SIGNALS A DANGER TO THE OPERATOR WHICH MIGHT CAUSE BODILY INJURY. MAY INCLUDE INSTRUCTIONS TO PREVENT THIS SITUATION***
CAUTION!	***SIGNALS A DANGER FOR THE DRIVE WHICH MIGHT DAMAGE THE PRODUCT OR OTHER EQUIPMENT. MAY INCLUDE INSTRUCTIONS TO AVOID THIS SITUATION***
CAUTION!	***Indicates areas SENSITIVE TO electrostatic discharges (ESD) WHICH REQUIRE HANDLING IN AN ESD PROTECTED ENVIRONMENT***

1.1 Warnings

WARNING!	***THE VOLTAGE USED IN THE DRIVE MIGHT CAUSE ELECTRICAL SHOCKS. DO NOT TOUCH LIVE PARTS WHILE THE POWER SUPPLIES ARE ON***
WARNING!	***TO AVOID ELECTRIC ARCING AND HAZARDS, NEVER CONNECT / DISCONNECT WIRES FROM THE DRIVE WHILE THE POWER SUPPLIES ARE ON***
WARNING!	***THE DRIVE MAY HAVE HOT SURFACES DURING OPERATION.***
WARNING!	***DURING DRIVE OPERATION, THE CONTROLLED MOTOR WILL MOVE. KEEP AWAY FROM ALL MOVING PARTS TO AVOID INJURY***

1.2 Cautions

CAUTION!	***THE POWER SUPPLIES CONNECTED TO THE DRIVE MUST COMPLY WITH THE PARAMETERS SPECIFIED IN THIS DOCUMENT***
CAUTION!	***TROUBLESHOOTING AND SERVICING ARE PERMITTED ONLY FOR PERSONNEL AUTHORISED BY TECHNOSOFT***
CAUTION!	***THE DRIVE CONTAINS ELECTROSTATICALLY SENSITIVE COMPONENTS WHICH MAY BE DAMAGED BY INCORRECT HANDLING. THEREFORE THE DRIVE SHALL BE REMOVED FROM ITS ORIGINAL PACKAGE ONLY IN AN ESD PROTECTED ENVIRONMENT***

To prevent electrostatic damage, avoid contact with insulating materials, such as synthetic fabrics or plastic surfaces. In order to discharge static electricity build-up, place the drive on a grounded conductive surface and also ground yourself.

1.3 Quality system, conformance and certifications

qualityaustria Succeed with Quality IQNet	**IQNet** and **Quality Austria** certification about the implementation and maintenance of the Quality Management System which fulfills the requirements of Standard **ISO 9001:2015**.
	Quality Austria Certificate about the application and further development of an effective **Quality Management System** complying with the requirements of Standard **ISO 9001:2015**
REACH	**REACH Compliance -** TECHNOSOFT hereby confirms that this product comply with the legal obligations regarding Article 33 of the European REACH Regulation 1907/2006 (Registration, Evaluation, Authorization and Restriction of Chemicals), which came into force on 01.06.2007.
ROHS	**RoHS Compliance -** Technosoft SA here with declares that this product is manufactured in compliance with the RoHS directive 2002/95/EC on the restriction of the use of certain hazardous substances in electrical and electronic equipment (RoHS)
CE	Technosoft SA hereby declares that this product conforms to the following European applicable directives: **2014/30/EU** **Electromagnetic Compatibility (EMC) Directive** **2014/35/EU** **Low Voltage Directive (LVD)** **93/68/EEC** **CE Marking Directive**
CONFLICT MINERALS	**Conflict minerals statement -** Technosoft declares that the company does not purchase 3T&G (tin, tantalum, tungsten & gold) directly from mines or smelters... We have no indication that Technosoft products contain minerals from conflict mines or smelters in and around the DRC.

For other certifications visit: https://technosoftmotion.com/en/quality/

2 Product Overview

2.1 Introduction

The **iPOS2401** is a family of fully digital intelligent servo drives, based on the latest DSP technology and they offer unprecedented drive performance combined with an embedded motion controller.

Suitable for control of brushless DC, brushless AC (vector control), DC brushed motors and step motors, the iPOS2401 drives accept as position feedback quadrature incremental encoders and digital Hall signals.

All drives perform position, speed or torque control and work in single, multi-axis or stand-alone configurations. Thanks to the embedded motion controller, the iPOS2401 drives combine controller, drive and PLC functionality in a single compact unit and are capable to execute complex motions without requiring intervention of an external motion controller. Using the high-level Technosoft Motion Language (**TML**) the following operations can be executed directly at drive level:

- Setting various motion modes (profiles, PVT, PT, electronic gearing[1] or camming[1], etc.)
- Changing the motion modes and/or the motion parameters
- Executing homing sequences
- Controlling the program flow through:
  - Conditional jumps and calls of TML functions
  - TML interrupts generated on pre-defined or programmable conditions (protections triggered, transitions on limit switch or capture inputs, etc.)
  - Waits for programmed events to occur
- Handling of digital I/O and analogue input signals
- Executing arithmetic and logic operations
- Performing data transfers between axes
- Controlling motion of an axis from another one via motion commands sent between axes[2]
- Sending commands to a group of axes (multicast). This includes the possibility to start simultaneously motion sequences on all the axes from the group[2]
- Synchronizing all the axis in a network

By implementing motion sequences directly at drive level you can really distribute the intelligence between the master and the drives in complex multi-axis applications, reducing both the development time and the overall communication requirements. For example, instead of trying to command each movement of an axis, you can program the drives using TML to execute complex motion tasks and inform the master when these tasks are done. Thus, for each axis control the master job may be reduced at: calling TML functions stored in the drive EEPROM and waiting for a message, which confirms the TML functions execution completion.

All iPOS2401 CAN drives are equipped with a serial RS232 and a CAN 2.0B interface that can be set by hardware pins to operate in 2 communication protocol modes:

- **CANopen**
- **TMLCAN**

When **CANopen** mode is selected, the iPOS2401 conforms to **CiA 301 v4.2** application layer communication profile and **CiA DSP 402 v3.0** device profile for drives and motion control, now included in IEC 61800-7-1 Annex A, IEC 61800-7-201 and IEC 61800-7-301 standards. In this mode, the iPOS2401 may be controlled via a CANopen master. The iPOS drive offers the possibility for a CANopen master to call motion sequences/ functions, written in TML and stored in the drive EEPROM, using manufacturer specific objects. Also, the drives can communicate separately between each other by using non reserved 11 bit identifiers.

When **TMLCAN** mode is selected, the iPOS2401 behaves as standard Technosoft intelligent drive and conforms to Technosoft protocol for exchanging TML commands via CAN-bus. When TMLCAN protocol is used, it is not mandatory to have a master. Any iPOS2401 can be set to operate standalone, and may play the role of a master to coordinate both the network communication/synchronization and the motion application via TML commands sent directly to the other drives.

When higher level coordination is needed, apart from a CANopen master, the iPOS2401 drives can also be controlled via a PC or a PLC using one of the **TML_LIB** motion libraries.

For iPOS2401 commissioning **EasySetUp** or **EasyMotion Studio** PC applications may be used.

[1] Available if the master axis sends its position via a communication channel, or by using the secondary encoder input

[2] Available only for CAN drives

EasySetUp is a subset of EasyMotion Studio, including only the drive setup part. The output of EasySetUp is a set of setup data that can be downloaded into the drive EEPROM or saved on a PC file. At power-on, the drive is initialized with the setup data read from its EEPROM. With EasySetUp it is also possible to retrieve the complete setup information from a drive previously programmed. EasySetUp shall be used for drive setup in all cases where the motion commands are sent exclusively from a master. Hence neither the iPOS2401 TML programming capability nor the drive camming mode are used. **EasySetUp can be downloaded free of charge from Technosoft web page.**

EasyMotion Studio platform includes EasySetUp for the drive setup, and a **Motion Wizard** for the motion programming. The Motion Wizard provides a simple, graphical way of creating motion programs and automatically generates all the TML instructions. *With EasyMotion Studio you can execute complex motions, thanks to their built-in motion controller*s. EasyMotion Studio, may be used to program motion sequences in TML. This is the iPOS2401 typical CAN operation mode when TMLCAN protocol is selected. EasyMotion Studio can also be used with the CANopen protocol, if the user wants to call TML functions stored in the drive EEPROM or to use the camming mode. With camming mode, EasyMotion Studio offers the possibility to quickly download and test a cam profile and also to create a **.sw** file with the cam data. The .sw file can be afterwards stored in a master and downloaded to the drive, wherever needed. **A demo version of EasyMotion Studio (with EasySetUp part fully functional) can be downloaded free of charge from Technosoft web page.**

2.2 Product Features

- Fully digital servo drive suitable for the control of rotary or linear brushless, DC brush, and step motors
- Very compact design
- Sinusoidal (FOC) or trapezoidal (Hall-based) control of brushless motors
- Open or closed-loop control of 2 and 3-phase steppers
- Various modes of operation, including: torque, speed or position control; position or speed profiles, Cyclic Synchronous Position (CSP) for CANopen mode, external reference mode (analogue or encoder feedback) or sent via a communication bus
- Technosoft Motion Language (TML) instruction set for the definition and execution of motion sequences
- Standalone operation with stored motion sequences
- Motor supply: 7-30V
- Logic supply: 7-40V.
- Output current: 0.9A[1] continuous; 0.9A peak
- PWM switching frequency up to 120kHz
- Communication:
  - RS-232 serial up to 115kbits/s
  - CAN-bus 2.0B up to 1Mbit/s (for CAN drives)
  - Dual 100Mbps EtherCAT® interfaces, for use in daisy-chaining topologies (for CAT drives)
- Digital and analog I/Os:
  - 5 digital inputs: 5-24 V, sourcing/NPN : 2 Limit switches, Enable and 2 general-purpose
  - 2 digital outputs: 5-24 V, with 0.5 A, sinking/NPN open-collector (2 general-purpose)
  - 2 drive state LEDs having the function or Error and Ready.
- Electro-Mechanical brake support: software configurable digital output to control motor brake
- Feedback devices:
  - Incremental encoder interface (single ended or differential)
  - Digital Hall sensor interface (single-ended and open collector)
  - Linear Hall sensor interface
  - 1 analogue input: 12 bit, 0-5V or ±10V: Reference or Feedback (for Tacho) or general purpose
- Various motion programming modes:
  - Position profiles with trapezoidal or S-curve speed shape
  - Position, Velocity, Time (PVT) 3rd order interpolation
  - Position, Time (PT) 1st order interpolation
  - Cyclic Synchronous Position (CSP) for CANopen mode and EtherCAT® drives.
  - Cyclic Synchronous Velocity (CSV) only for EtherCAT® drives.
  - Cyclic Synchronous Torque (CST) only for EtherCAT® drives.
  - Electronic gearing and camming
  - 35 Homing modes
- Software CAN selectable addresses

[1] 0.9A cont. with DC, step and BLDC motors (trapezoidal), 0.9A amplitude ($0.64A_{RMS}$) for PMSM (sinusoidal)

- Two CAN operation modes selectable by HW pin (only for CAN drives):
  - **CANopen** – conforming with **CiA 301 v4.2** and **CiA DSP 402 v3.0**
  - **TMLCAN** – intelligent drive conforming with Technosoft protocol for exchanging TML commands via CAN-bus
- EtherCAT® with CAN application protocol over EtherCAT (CoE) for CAT drives
- 2K × 16 internal SRAM memory for data acquisition
- 4K × 16 E^2ROM to store TML motion programs, cam tables and other user data
- Operating ambient temperature:
  - 0-70°C – iPOS2401 MX-CAN
  - 0-40°C – iPOS2401 MX-CAT
- Protections:
  - Short-circuit between motor phases
  - Short-circuit from motor phases to ground
  - Over-voltage
  - Under-voltage
  - Over-current
  - Communication error
  - Control error
  - Over-temperature

2.3 Identification Labels

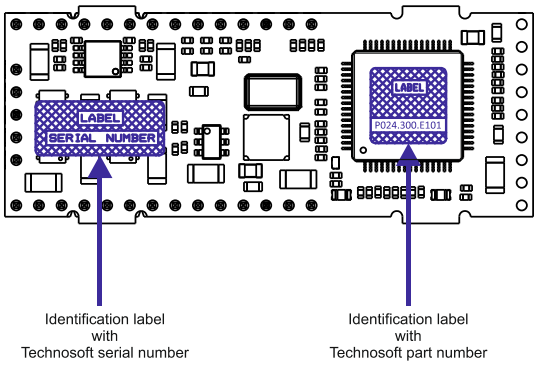

Figure 2.3.1. *iPOS2401 MX-CAN identification labels*

The iPOS2401 MX can has the following part number and name on the identification label:

p.n. **P024.300.E101** name iPOS 2401 MX-CAN – standard CAN execution

p.n. **P024.200.E121** name iPOS 2401 MX-CAT – standard EtherCAT® execution

2.4 Supported Motor-Sensor Configurations

The position and/or speed are controlled using one feedback sensor.

Sensor type \ Motor	Brushless PMSM	Brushless BLDC	DC Brush	Stepper 2 phase	Stepper 3 phase
Incr. encoder	Yes	-	Yes	Yes	-
Incr. encoder + Digital Hall	Yes	Yes	-	-	-
Digital halls only	Yes	-	-	-	-
Linear Halls	Yes				
Tacho	-	-	Yes	-	-
Open-loop (no sensor)	-	-	-	Yes	Yes
Open-loop (with step loss detection using incr. Encoder)	-	-	-	Yes	Yes
Open-loop with incr. encoder on load	-	-	-	Yes	Yes

2.5 iPOS2401 I/O Evaluation board

A circuit board is available for evaluating the following types of drives:

Compatible Product Name	Part Number	Description
iPOS2401 MX-CAN	P027.300.E101	Drive with CAN
iPOS2401 MX-CAT	P027.300.E121	Drive with EtherCAT®

It comes with multiple types of connectors for easy access to the iPOS2401 features.

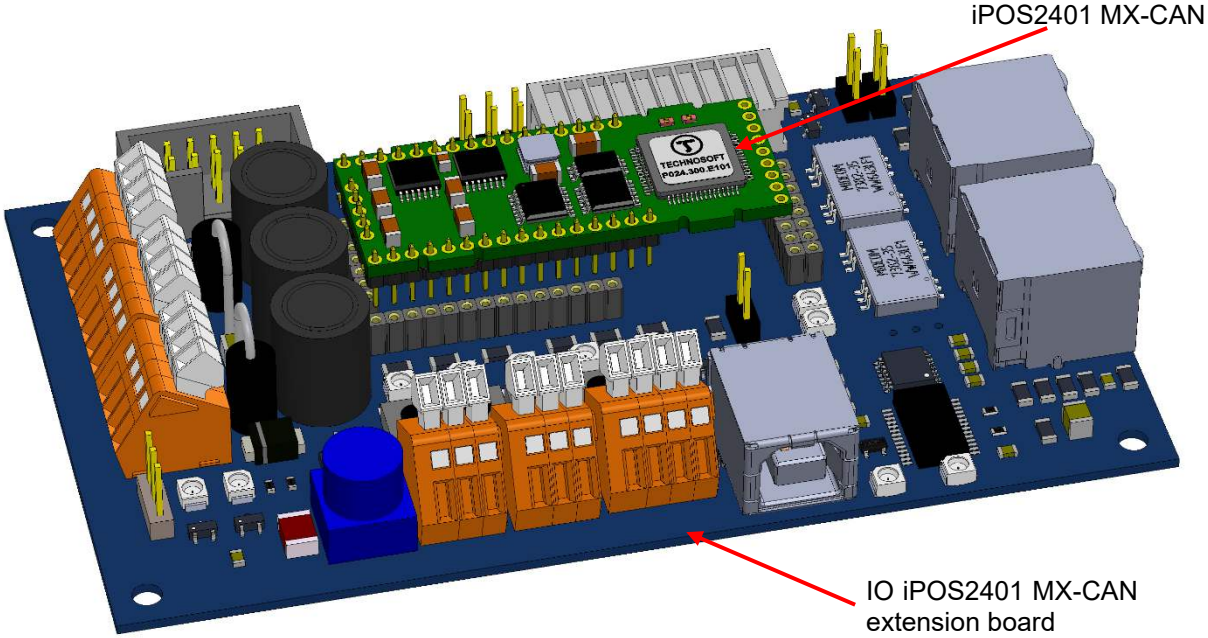

Figure 2.5.1. *iPOS2401 MX-CAN mounted on the I/O iPOS2401 extension board*

Ordering information

Part number	**Description**
P091.084.IO-iPOS240x.UM.xxxx	Evaluation board User Manual (available for download on our website)
P024.300.E880	IO iPOS2401 MX extension board only
P024.300.E800	iPOS2401 MX-CAN Starter kit w/o motor
P024.300.E804	iPOS2401 MX-CAN Starter kit with brushless motor
P024.200.E810	iPOS2401 MX-CAT Starter kit w/o motor
P024.200.E814	iPOS2401 MX-CAT Starter kit with brushless motor

3 Hardware Installation

3.1 iPOS2401 MX-CAN Board Dimensions

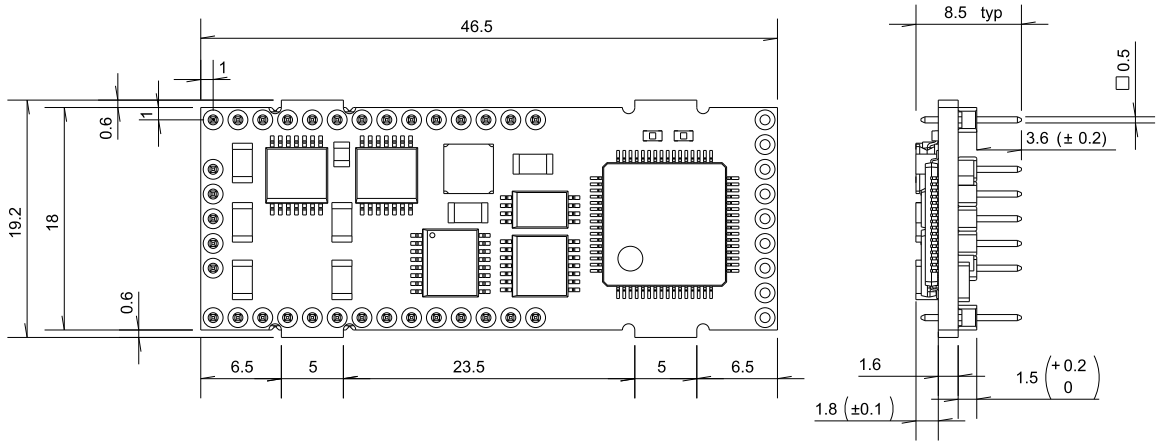

Figure 3.1.1. *iPOS2401 MX-CAN drive dimensions*

All dimensions are in mm. The drawings are not to scale.

3.2 iPOS2401 MX-CAT Board Dimensions

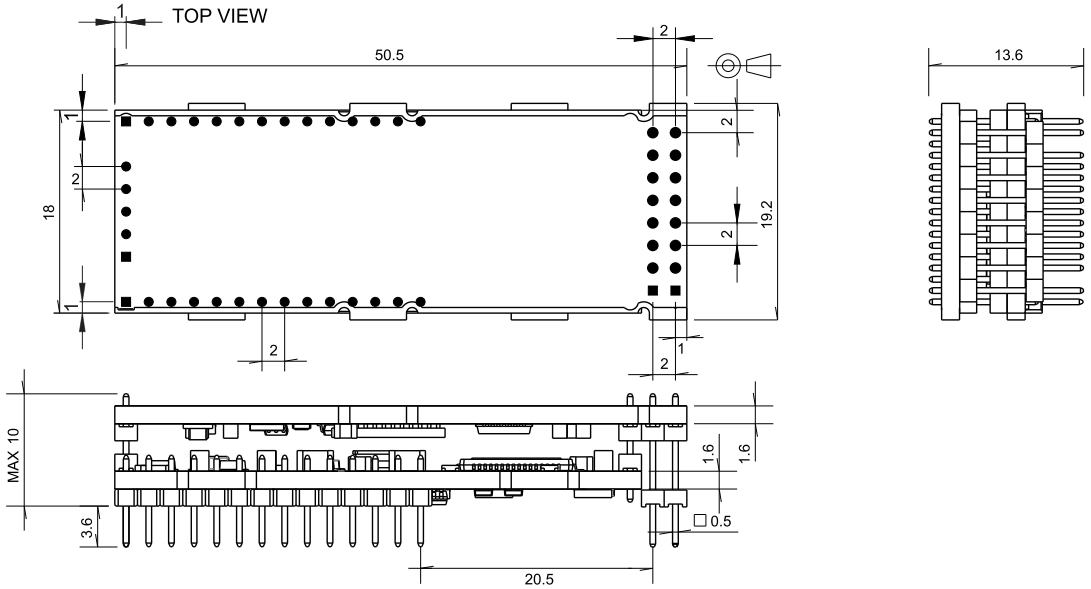

Figure 3.2.1. *iPOS2401 MX-CAT drive dimensions*

All dimensions are in mm. The drawings are not to scale.

3.3 Mechanical Mounting

The iPOS2401 drive is intended to be mounted horizontally on a motherboard equipped with the recommended mating connectors, as specified in chapter **3.5.2 Mating Connectors**. Several drives can be hosted by a single motherboard.

For thermal calculations:

- the iPOS2401 MX-CAN drive can be assumed to generate 1 Watt (= 3.4 BTU/hour) at idle, and up to 2 Watt (= 7 BTU/hour) worst case while driving a motor.
- the iPOS2401 MX-CAT drive can be assumed to generate 2.5 Watt (= 8.5 BTU/hour) at idle, and up to 3.5 Watt (= 12 BTU/hour) worst case while driving a motor.

3.3.1 iPOS2401 MX-CAN PCB Footprint

For iPOS2401 MX-CAN motherboard PCB design, use the dimensional drawing from Figure ***3.2*** below.

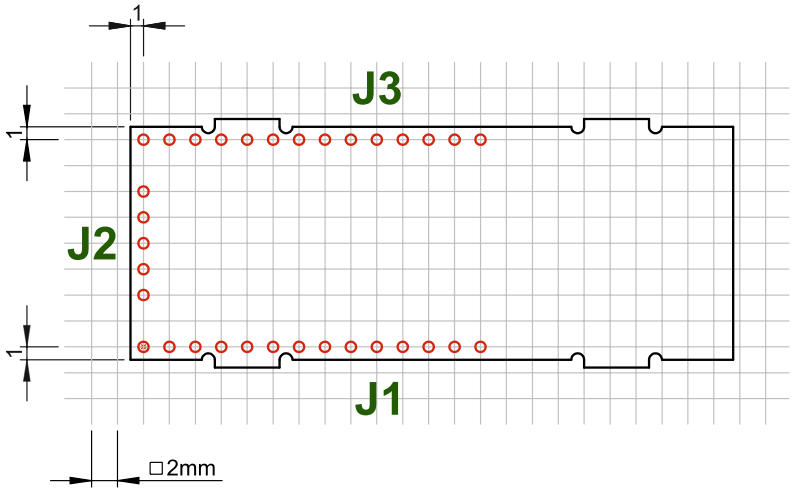

Figure 3.2 **iPOS2401 MX-CAN PCB Footprint**

All dimensions are in mm. Top view. Holes are marked with **RED**.

3.3.2 iPOS2401 MX-CAT PCB Footprint

For iPOS2401 MX-CAN motherboard PCB design, use the dimensional drawing from Figure ***3.3*** below.

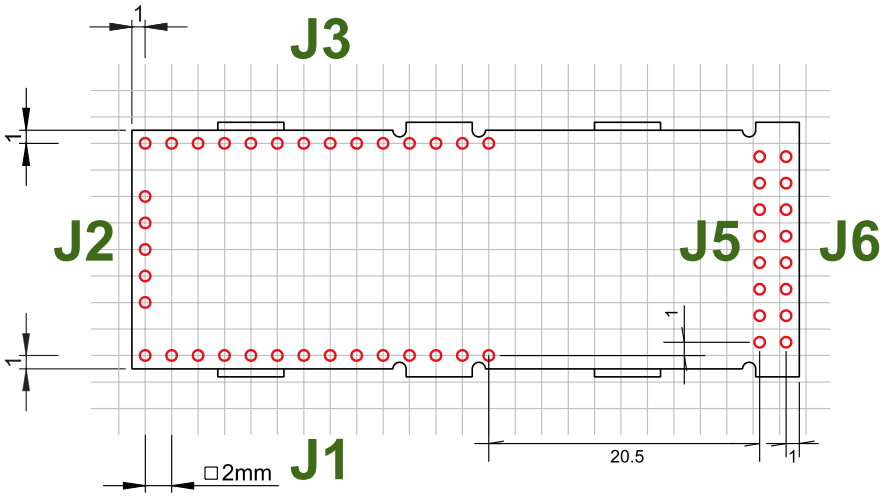

Figure 3.3 **iPOS2401 MX-CAT PCB Footprint**

All dimensions are in mm. Top view. Holes are marked with **RED**.

3.4 Motherboard PCB Design

It is recommended to use a multi-layer PCB for the motherboard, in order to have enough room for routing all the pins of the iPOS2401. Using a 2-layer PCB is possible when some of the iPOS2401 pins remain un-connected.

Below is a list of recommendations for the PCB design of the motherboard:

- Motor supply and motor outputs: use islands / areas of copper to escape connector areas; this will maximize current capability. When using simple tracks, use at least 50mil cross section (35mil track width for 1oz/ft^2 copper thickness)
- Motor supply and ground return tracks between iPOS2401 and the nearby V_{MOT} decoupling capacitor are to be considered as EMI sources, and kept to a minimum length.
- Place the decoupling capacitors on V_{MOT} and V_{LOG} (see also 3.6.8 Power Supply Connection) as close as physically possible to the iPOS2401, to minimize EM radiated emissions. For un-shielded applications (no metallic box) and typical EMC regulations, the spacing between iPOS2401 and capacitors must be less than 3 centimeters.

- In multi-axis applications (multiple iPOS2401 drives on the same motherboard), it is preferable to have a separate decoupling capacitor for each drive's V_{MOT}. For V_{LOG} it is acceptable to share one decoupling capacitor for two drives.
- For stringent EMI requirements, it may be necessary to add common-mode filtering on the motor and/or logic supply inputs. Be sure to use 3-phase EMC filters, not 2-phase filters, in order to fulfill the basic requirement of zero common-mode current through the filter. This is necessary because the ground negative return is shared between V_{MOT} and V_{LOG}.
- Motor outputs shall be routed with parallel traces, and minimizing the loop area between these tracks. Avoid placing components above or below the motor output tracks, as these components may become effective antennas radiating EMI. If possible, route all 4 motor outputs in strip-line configuration (above or below a ground plane).
- For stringent EMI requirements, it may be necessary to add common-mode inductors on the motor outputs. Place these filters near the iPOS2401, not near the external connector, to reduce radiation from the PCB tracks.
- Motor outputs must be separated from any nearby track (on the same layer) by a guard ring / track / area connected to ground. It is recommended to use the same guarding precaution also for tracks on nearby layers, i.e. use intermediate guard layer(s) connected to ground. The motor outputs must be treated as first source of noise on the motherboard. Second source of noise is the current flow between each iPOS2401 and its decoupling V_{MOT} capacitor.
- For best EMC performance, it is strongly recommended to provide an un-interrupted ground plane on one of the inner layers.
- All GND pins of the iPOS2401 are galvanically connected together on-board the iPOS2401. If the motherboard provides an uninterrupted ground plane, it is recommended to connect all GND pins to the ground plane, and use the ground plane to distribute GND wherever needed. If the motherboard does not provide an uninterrupted ground plane, it is best to distribute GND connections evenly across the 3 pins. This will create local "star point" ground connection on-board each iPOS2401. For a multi-axis motherboard with one common power supply for all motors, each motor power supply return track shall be routed separately for each iPOS2401, and star-point connected at the power supply terminal.
- The following signal pairs must be routed differentially, i.e. using parallel tracks with minimal loop area: A1, A1- ; B1+, B1- ; Z1+, Z1- ; CAN-Hi, CAN-Lo.
- CAN-Bus tracks must be routed with a bus topology, without branches / bifurcations, in a daisy-chain fashion. The bus ends must be at the termination resistor(s) and/or external connectors.
- When using $+5V_{OUT}$ as supply for external devices (like encoders, Hall sensors, etc.) provide extra filtering and protection: use series resettable (PTC) fuses to add short-circuit protection; use transient absorbers to protect against ESD and over-voltage; add high-frequency filtering to protect against external noise injected on $+5V_{OUT}$.
- The outer box / case / cabinet must be connected to the motherboard ground either galvanically (directly) or through high-frequency decoupling capacitors, rated at an appropriate voltage.

CAUTION!	***WHEN THE iPOS2401 IS SET IN TMLCAN MODE, IT STARTS TO EXECUTE AUTOMATICALLY AT POWER ON THE TML APPLICATION FROM ITS EEPROM. ADD ON THE MOTHERBOARD THE POSSIBILITY TO DISABLE THIS FEATURE AS SHOWN PAR. 3.6.12. THIS MIGHT BE NEEDED DURING DEVELOPMENT PHASE IN CASE THE EEPROM CONTENT IS ACCIDENTALLY CORRUPTED.***

CAUTION!	***THE iPOS2401 IS AN ELECTROSTATICALLY SENSITIVE DEVICE, WHICH WILL BE DAMAGED BY INCORRECT HANDLING. THEREFORE THE DRIVE SHALL BE REMOVED FROM ITS ORIGINAL PACKAGE ONLY IN AN ESD PROTECTED ENVIRONMENT!***

3.5 Connectors and Pinouts

3.5.1 Pinouts for iPOS2401 MX-CAN

Top view

Pin	Name	Description
1	GND	Return ground
2	A / A+	Incr. encoder A single-ended, or A+ diff. input
3	A-	Incr. encoder A- diff. input, or linear Hall 3
4	B / B+	Incr. encoder B single-ended, or B+ diff. input
5	B-	Incr. encoder B- diff. input, or linear Hall 2
6	Z / Z+	Incr. encoder Z (index) single-ended, or Z+ diff. input
7	Z-	Incr. encoder Z- diff. input, or linear Hall 1
8	Hall 1	Digital input Hall 1 sensor
9	Hall 2	Digital input Hall 2 sensor
10	Hall 3	Digital input Hall 3 sensor
11	REF/FDBK	Analogue input, 12-bit, 0-5V. Used to read an analog position, speed or torque reference or feedback; can be used as general purpose analogue input
12	$+5V_{OUT}$	5V output supply
13	TMLCAN/ CANopen	Connect to GND to enable CANopen protocol; Leave unconnected or connect to +5V for TMLCAN protocol
14	GND	Return ground

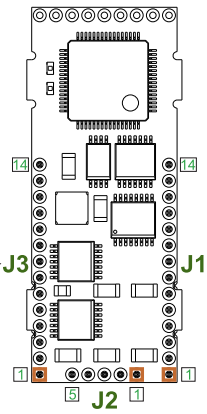

Pin	Name	Description
1	GND	Return ground
2	$+V_{MOT}$	Positive terminal of the motor supply: 7 to $30V_{DC}$
3	$+V_{LOG}$	Positive terminal of the logic supply: 7 to $40V_{DC}$
4	OUT0	5-24V 0.5A general-purpose digital output, NPN open-collector / TTL pull-up
5	OUT1	5-24V 0.5A general-purpose digital output, NPN open-collector / TTL pull-up
6	IN0	5-24V digital NPN input
7	IN1	5-24V digital NPN input
8	IN2 / LSP	5-24V digital NPN input Positive limit switch input
9	IN3 / LSN	5-24V digital NPN input Negative limit switch input
10	IN4 / Enable	5-24V digital NPN input Drive enable input
11	232RX	RS-232 Data Reception
12	232TX	RS-232 Data Transmission
13	Can-Hi	CAN-Bus positive line (dominant high)
14	Can-Lo	CAN-Bus negative line (dominant low)

Pin	Name	Description
1	B / A-	Phase B for 3-ph motors, A- for 2-ph steppers, Motor- for DC brush motors
2	A / A+	Phase A for 3-ph motors, A+ for 2-ph steppers, Motor+ for DC brush motors
3	GND	Return ground
4	C / B+	Phase C for 3-ph motors, B+ for 2-ph steppers
5	CR / B-	Chopping resistor output/ Phase B- for step motors

3.5.2 Mating Connectors for iPOS2401 MX-CAN

Connector	Description	Manufacturer	Part Number	Images
J1 and J3	Board-To-Board Connector, 2 mm pitch, 14 Contacts, Receptacle, Through Hole, 1 Row, accepts 0.5mm square pins	FISCHER ELEKTRONIK	BLY1 14	
J2	Board-To-Board Connector, 2 mm pitch, 5 Contacts, Receptacle, Through Hole, 1 Row, accepts 0.5mm square pins	FISCHER ELEKTRONIK	BLY1 05	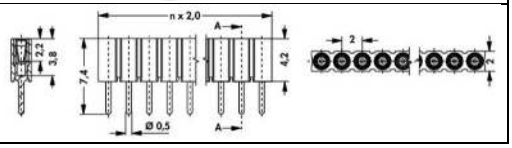

3.5.3 Pinouts for iPOS2401 MX-CAT

Pin	Name	Description
1	TX0+	Transmit/Receive positive, IN port. Connect to magnetics primary. Magnetics secondary corresponds to pin 1 or RJ45.
2	TX0-	Transmit/Receive negative, IN port. Connect to magnetics. After magnetics circuit, it corresponds to pin 2 or RJ45.
3	RX0+	Receive/Transmit positive, IN port. Connect to magnetics primary. Magnetics secondary corresponds to pin 3 or RJ45.
4	RX0-	Receive/Transmit negative, IN port. Connect to magnetics primary. Magnetics secondary corresponds to pin 6 or RJ45.
5	CT0_Tx	Return for center tap of magnetics primary that is also connected to pins 1,2 of J5
6	CT0_Rx	Return for center tap of magnetics primary that is also connected to pins 3,4 of J5
7	ACT0	Anode of Link/Activity LED for port IN.
8	ERR	Anode of Error LED (EtherCAT status machine).

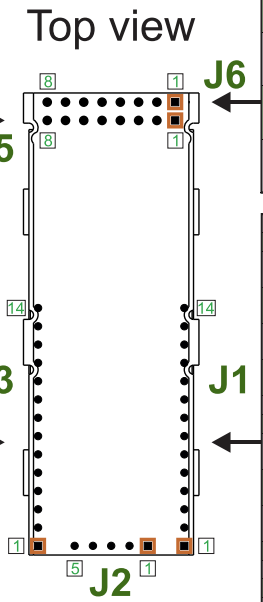

Pin	Name	Description
1	RUN	Anode of Run LED (EtherCAT status machine).
2	ACT1	Anode of Link/Activity LED for port OUT.
3	CT1_Rx	Return for center tap of magnetics primary that is also connected to pins 5,6 of J6
4	CT1_Tx	Return for center tap of magnetics primary that is also connected to pins 7,8 of J6
5	RX1-	Receive/Transmit negative, OUT port. Connect to magnetics. After magnetics circuit, it corresponds to pin 6 or RJ45.
6	RX1+	Receive/Transmit positive, OUT port. Connect to magnetics. After magnetics circuit, it corresponds to pin 3 or RJ45.
7	TX1-	Transmit/Receive negative, OUT port. Connect to magnetics. After magnetics circuit, it corresponds to pin 2 or RJ45.
8	TX1+	Transmit/Receive positive, OUT port. Connect to magnetics. After magnetics circuit, it corresponds to pin 1 or RJ45.

Pin	Name	Description
1	GND	Return ground
2	A / A+	Incr. encoder A single-ended, or A+ diff. input
3	A-	Incr. encoder A- diff. input
4	B / B+	Incr. encoder B single-ended, or B+ diff. input
5	B-	Incr. encoder B- diff. input
6	Z / Z+	Incr. encoder Z (index) single-ended, or Z+ diff. input
7	Z-	Incr. encoder Z- differential input
8	Hall 1	Digital input Hall 1 sensor
9	Hall 2	Digital input Hall 2 sensor
10	Hall 3	Digital input Hall 3 sensor
11	REF/FDBK	Analogue input, 12-bit, 0-5V or ±10V (software selectable). Used to read an analog position, speed or torque reference or feedback; can be used as general purpose analogue input
12	$+5V_{OUT}$	5V output supply
13	Reserved	Reserved – do not connect
14	GND	Return ground

Pin	Name	Description
1	GND	Return ground
2	$+V_{MOT}$	Positive terminal of the motor supply: 7 to $30V_{DC}$
3	$+V_{LOG}$	Positive terminal of the logic supply: 7 to $40V_{DC}$
4	OUT0	5-24V 0.5A general-purpose digital output, NPN open-collector / TTL pull-up
5	OUT1	5-24V 0.5A general-purpose digital output, NPN open-collector / TTL pull-up
6	IN0	5-24V digital NPN input
7	IN1	5-24V digital NPN input
8	IN2 / LSP	5-24V digital NPN input Positive limit switch input
9	IN3 / LSN	5-24V digital NPN input Negative limit switch input
10	IN4 / Enable	5-24V digital NPN input Drive enable input
11	232RX	RS-232 Data Reception
12	232TX	RS-232 Data Transmission
13	Can-Hi	CAN-Bus positive line (dominant high)
14	Can-Lo	CAN-Bus negative line (dominant low)

Pin	Name	Description
1	B / A-	Phase B for 3-ph motors, A- for 2-ph steppers, Motor- for DC brush motors
2	A / A+	Phase A for 3-ph motors, A+ for 2-ph steppers, Motor+ for DC brush motors
3	GND	Return ground
4	C / B+	Phase C for 3-ph motors, B+ for 2-ph steppers
5	CR / B-	Chopping resistor output/ Phase B- for step motors

3.5.4 Mating Connectors for iPOS2401 MX-CAT

Connector	Description	Manufacturer	Part Number	Images
J1 and J3	Board-To-Board Connector, 2 mm pitch, 14 Contacts, Receptacle, Through Hole, 1 Row, accepts 0.5mm square pins	FISCHER ELEKTRONIK	BLY1 14	
J2	Board-To-Board Connector, 2 mm pitch, 5 Contacts, Receptacle, Through Hole, 1 Row, accepts 0.5mm square pins	FISCHER ELEKTRONIK	BLY1 05	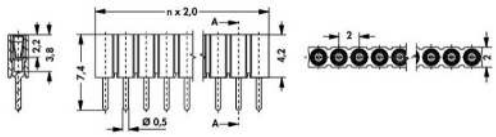
J5 and J6	Board-To-Board Connector, 2 mm pitch, 8 Contacts, Receptacle, Through Hole, 1 Row, accepts 0.5mm square pins	FISCHER ELEKTRONIK	BLY1 08	

3.6 Connection diagrams

3.6.1 iPOS2401 MX-CAN connection diagram

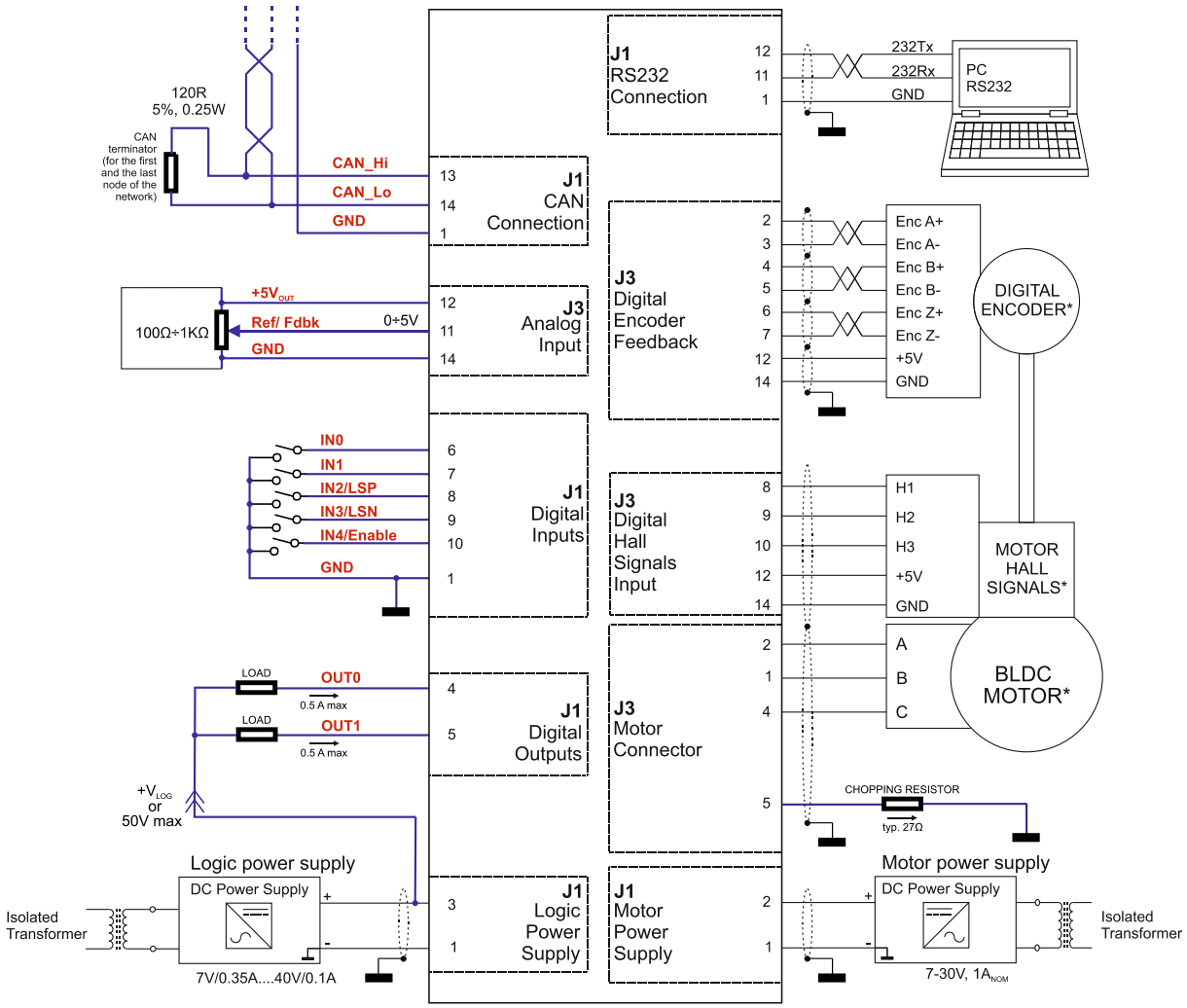

Figure 3.4. **iPOS2401 MX-CAN Connection diagram**

* For other available feedback / motor options, check the detailed connection diagrams below

3.6.2 iPOS2401 MX-CAT connection diagram

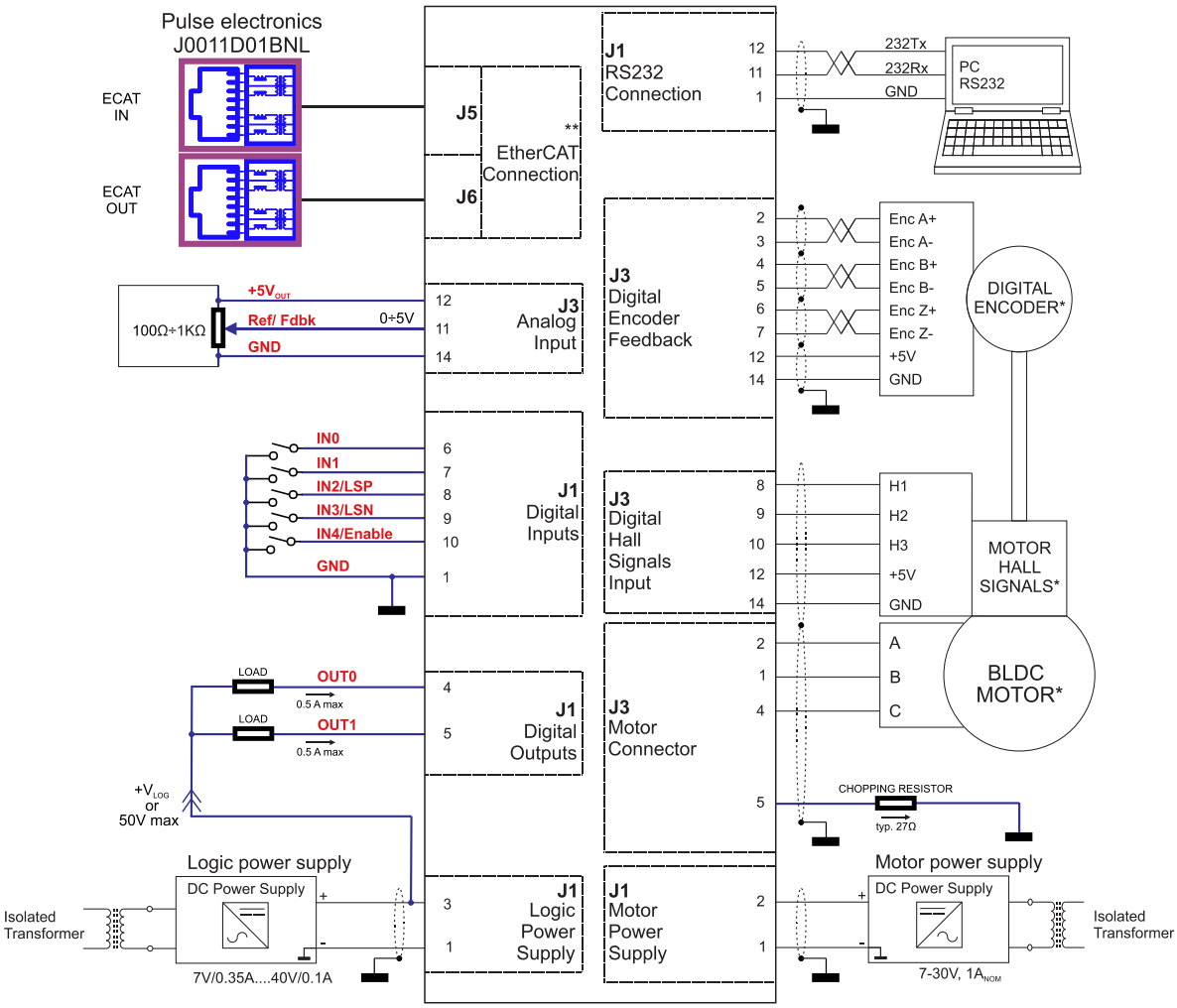

Figure 3.5. **iPOS2401 MX-CAT Connection diagram**

* For other available feedback / motor options, check the detailed connection diagrams below

** For a detailed EtherCAT bus connection diagram see 3.6.11 EtherCAT bus connection (for CAT drives).

3.6.3 24V Digital I/O Connection

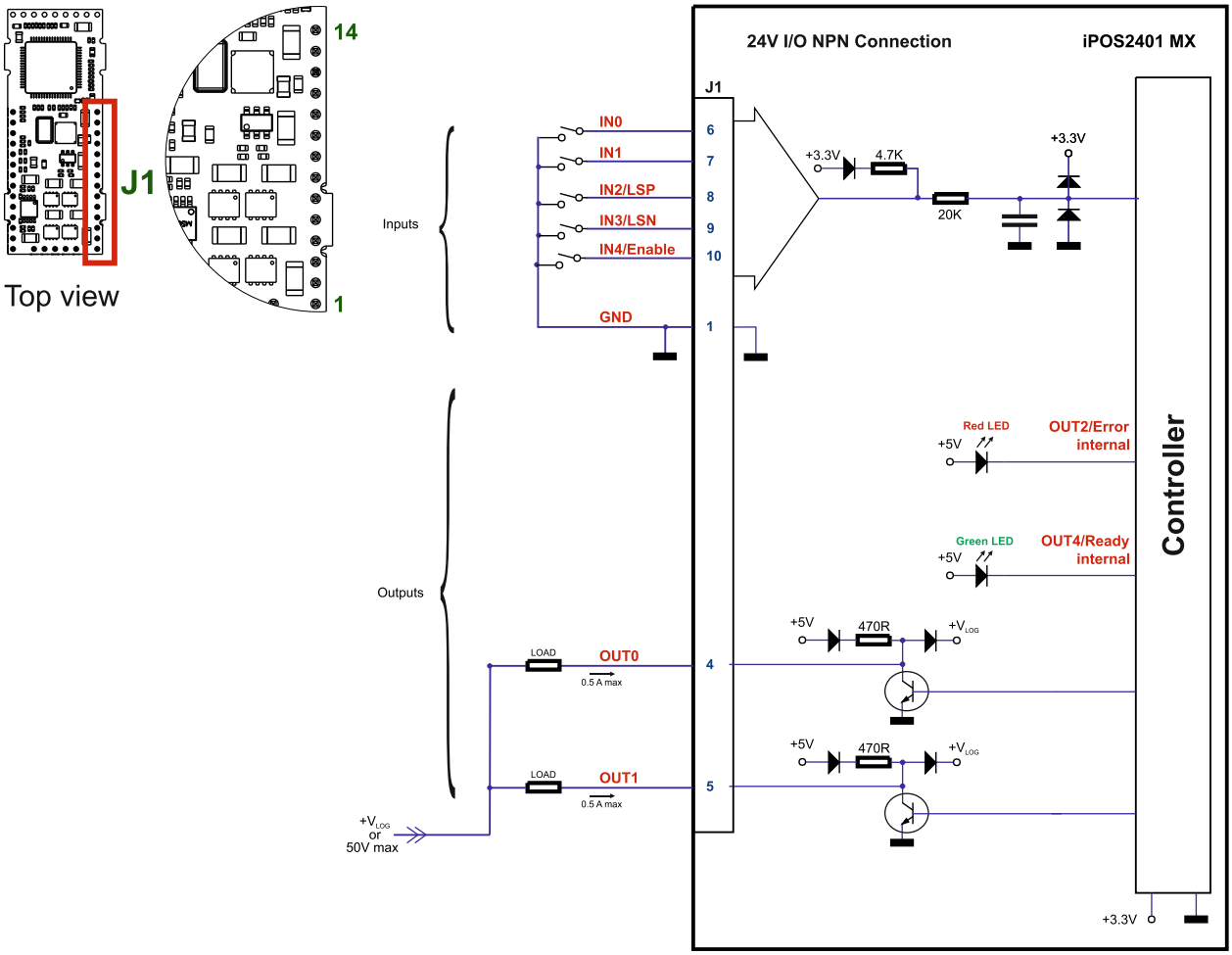

Figure 3.6. **24V Digital NPN Inputs connection**

Remarks:

1. *The inputs are compatible with NPN type outputs (input must be pulled to GND to change its default state)*
2. *The length of the cables must be up to 30m, reducing the exposure to voltage surges in industrial environment.*
3. *The outputs are compatible with NPN type inputs (load is tied to common +V_{LOG}, output pulls to GND when active and is floating when inactive)*
4. *The maximum sink current is 0.5A continuous, up to 1A pulsed for less than 5 seconds*

3.6.4 5V Digital I/O Connection

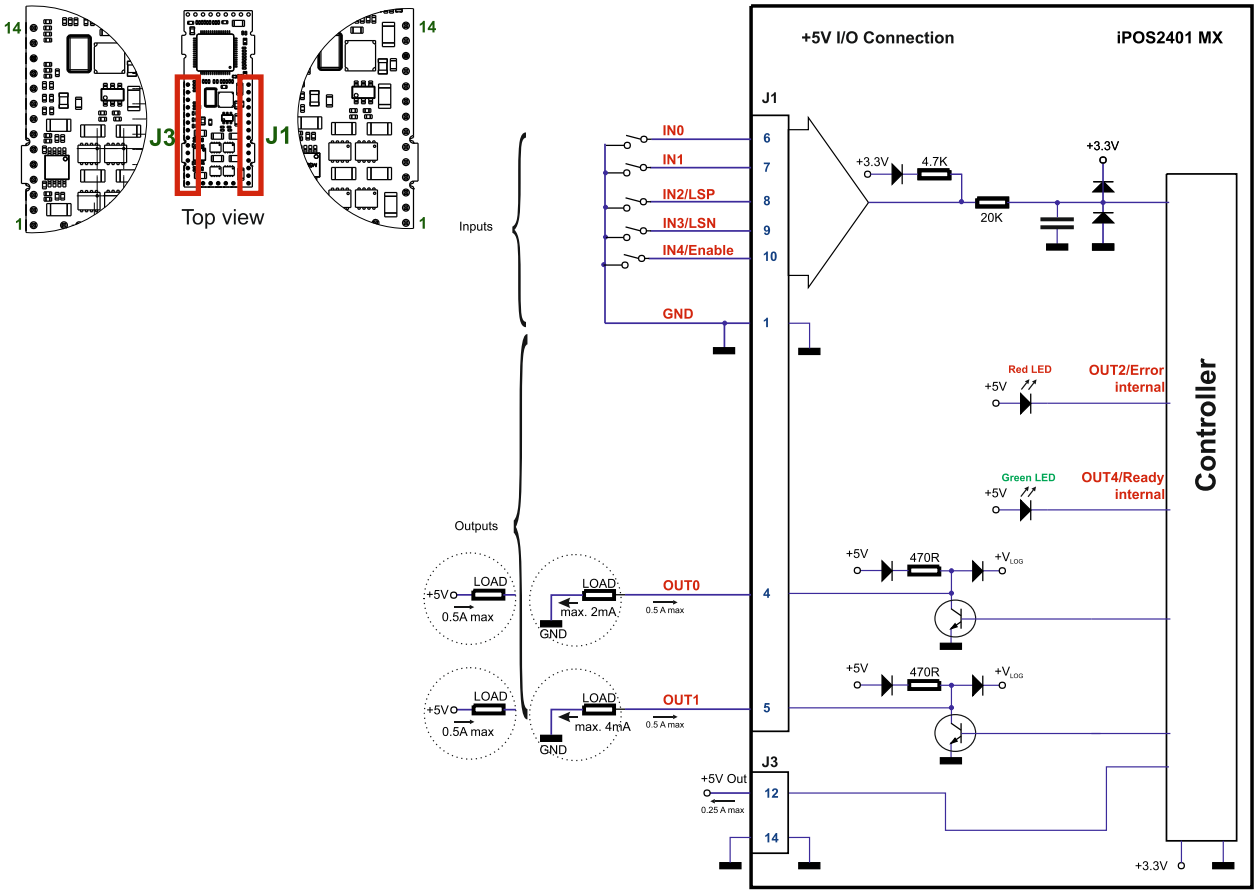

Figure 3.7. **5V Digital I/O connection**

Remarks:

1. *The inputs are compatible with TTL(5V), LVTTL(3.3V), CMOS and open collector outputs*
2. *The outputs are compatible with TTL (5V) and CMOS (5V) inputs*
3. *The output loads can be individually and independently connected to +5V or to GND.*
4. *The length of the cables must be up to 30m, reducing the exposure to voltage surges in industrial environment.*

3.6.5 Analog Inputs Connection

3.6.5.1 0-5V Input Range

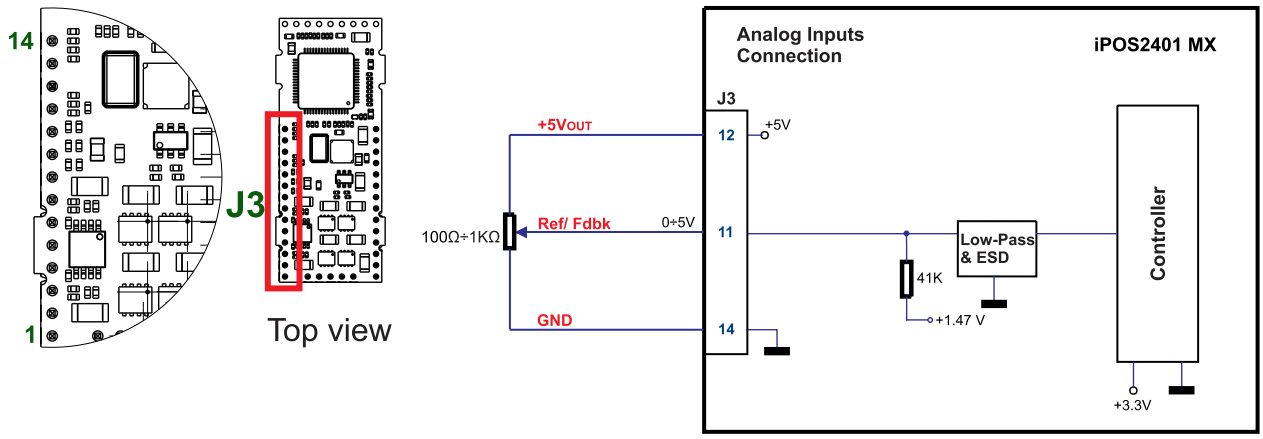

Figure 3.8. ***0-5V* Analog inputs connection**

Remarks:

1. *The length of the cables must be up to 30m, reducing the exposure to voltage surges in industrial environment.*

3.6.5.2 Recommendation for wiring

a) If the analogue signal source is single-ended, use a 2-wire twisted shielded cable as follows: 1st wire connects the live signal to the drive input; 2nd wire connects the source ground to the drive ground; shield will be connected to the drive ground terminal.

b) If the analogue signal source is differential and the signal source ground is isolated from the drive GND, use a 2-wire twisted shielded cable as follows: 1st wire connects the source plus (positive, in-phase) to the drive analogue input; 2nd wire connects the source minus (negative, out-of-phase) to the drive ground (GND). Shield is connected only at the drive side, to the drive GND, and is left unconnected at the source side.

c) If the analogue signal source is differential and the signal source ground is common with the drive GND, use a 2-wire shielded cable as follows: 1st wire connects the source plus (positive, in-phase) to the drive analogue input; 2nd wire connects the source ground to the drive ground (GND); shield is connected only at the drive side, to the drive GND, and is left unconnected at the source side. The source minus (negative, out-of-phase) output remains unconnected.

3.6.6 Motor connections

3.6.6.1 Brushless Motor connection

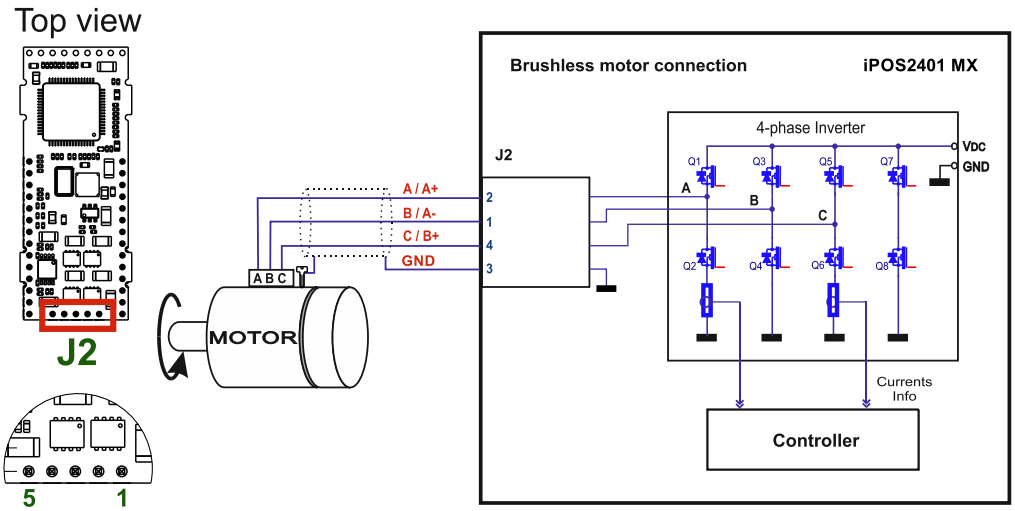

Figure 3.9. **Brushless motor connection**

3.6.6.2 2-phase Step Motor connection

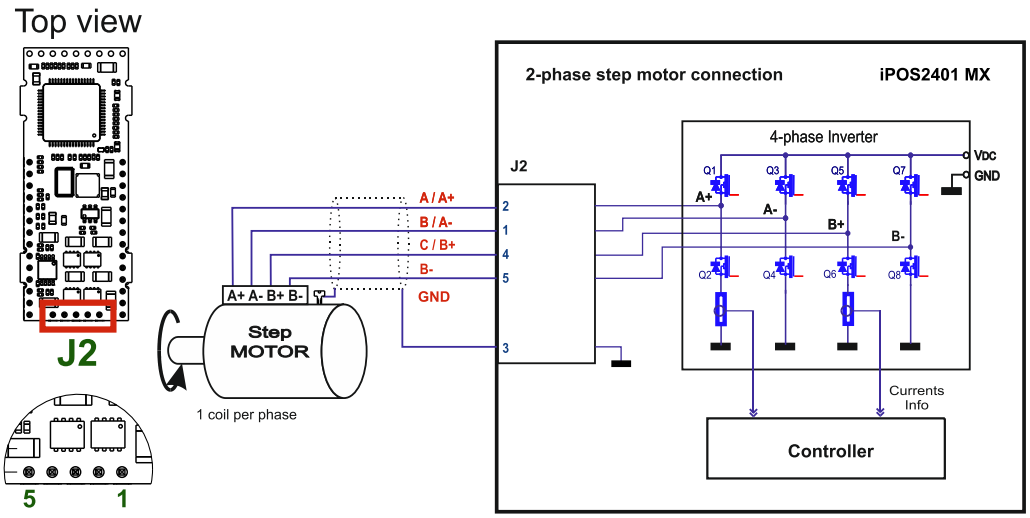

Figure 3.10. **2-phase step motor connection, one coil per phase**

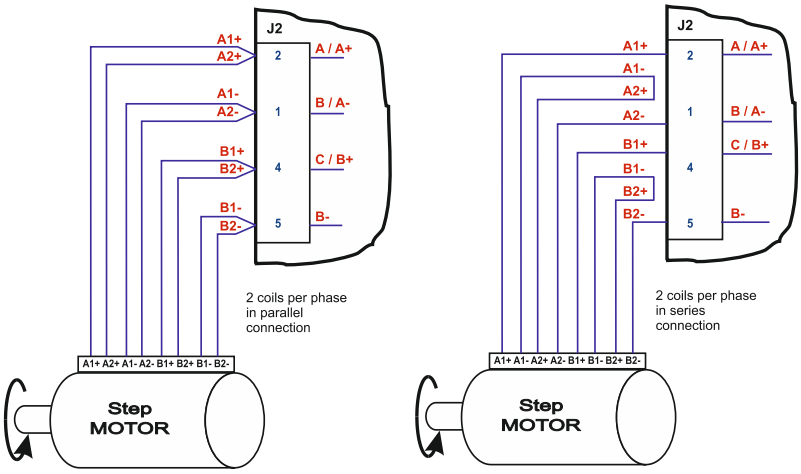

Figure 3.11. **2-phase step motor connection, two coils per phase**

3.6.6.3 3-Phase Step Motor connection

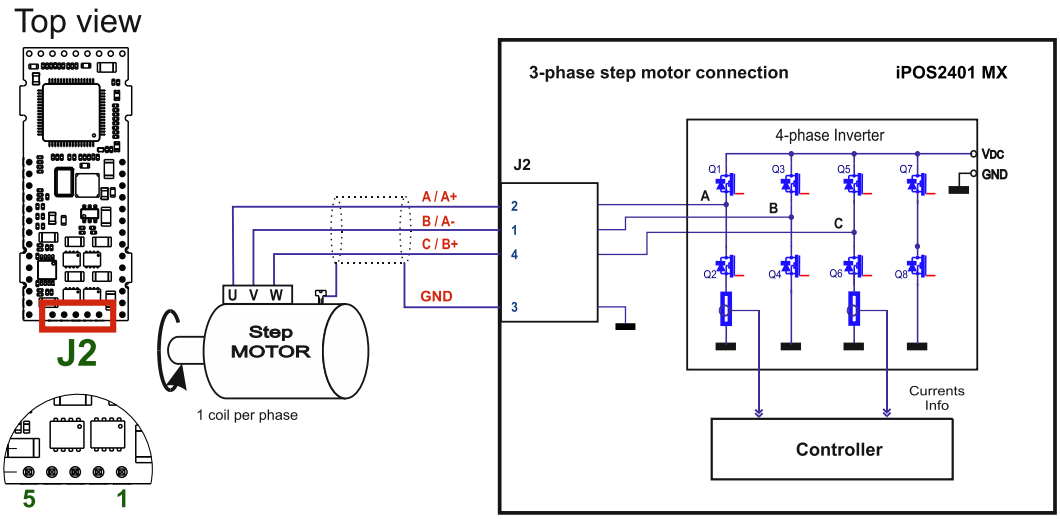

Figure 3.12. **3-phase step motor connection**

3.6.6.4 DC Motor connection

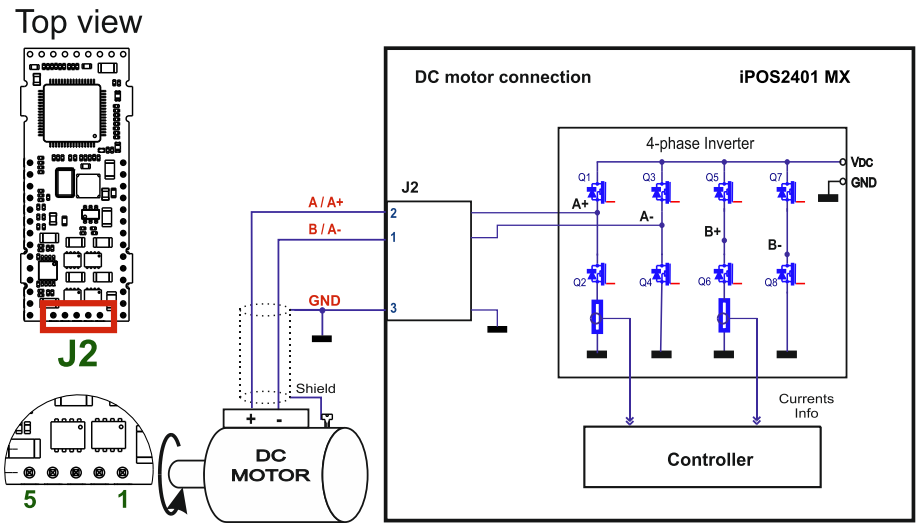

Figure 3.13. **DC Motor connection**

3.6.6.5 Recommendations for motor wiring

a) Avoid running the motor wires in parallel with other wires for a distance longer than 2 meters. If this situation cannot be avoided, use a shielded cable for the motor wires. Connect the cable shield to the iPOS2401 GND pin. Leave the other end disconnected.

b) The parasitic capacitance between the motor wires must not bypass 10nF. If very long cables (tens of meters) are used, this condition may not be met. In this case, add series inductors between the iPOS2401 outputs and the cable. The inductors must be magnetically shielded (toroidal, for example), and must be rated for the motor surge current. Typically the necessary values are around 100 µH.

A good shielding can be obtained if the motor wires are running inside a metallic cable guide.

3.6.7 Feedback connections

3.6.7.1 Single-ended Incremental Encoder Connection

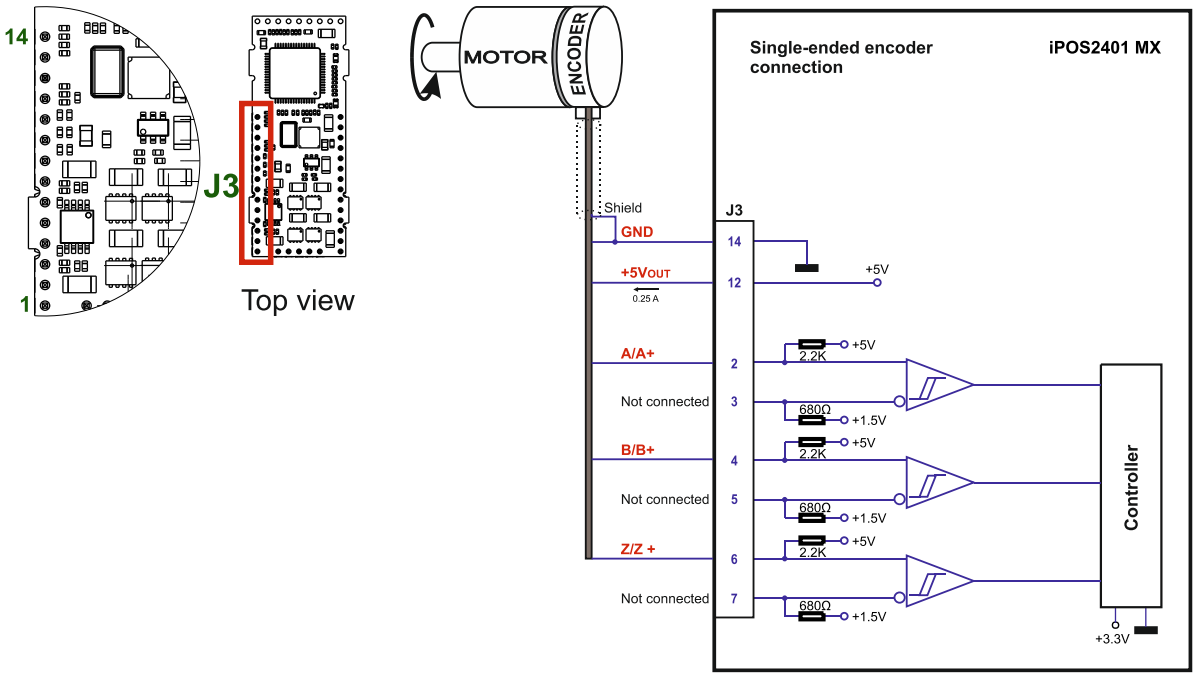

Figure 3.14. **Single-ended incremental encoder connection**

CAUTION!	***DO NOT CONNECT UNTERMINATED WIRES. THEY MIGHT PICK UP UNWANTED NOISE AND GIVE FALSE ENCODER READINGS.***

3.6.7.2 Differential Incremental Encoder Connection

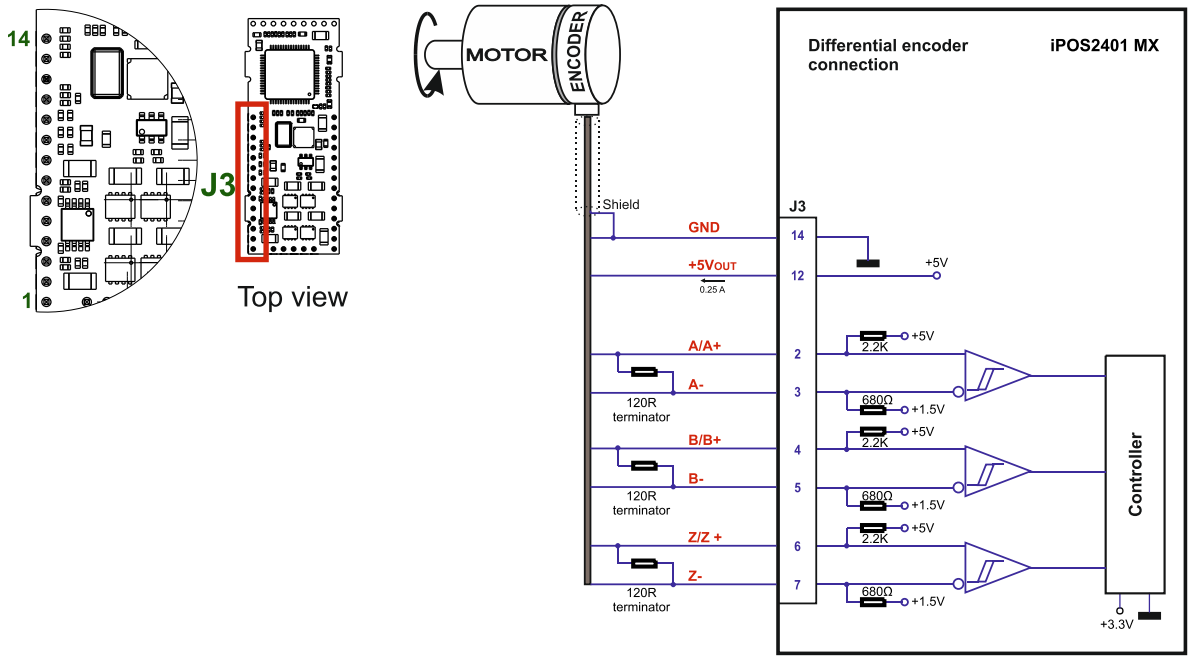

Figure 3.15. **Differential incremental encoder connection**

Remarks:

1. *For the encoder differential connection, external 120Ω (0.25W) terminators are required for long encoder cables, or noisy environments.*
2. *The length of the cables must be up to 30m, reducing the exposure to voltage surges in industrial environment.*

3.6.7.3 Digital Hall Connection for Motor + Hall + Incremental Encoder

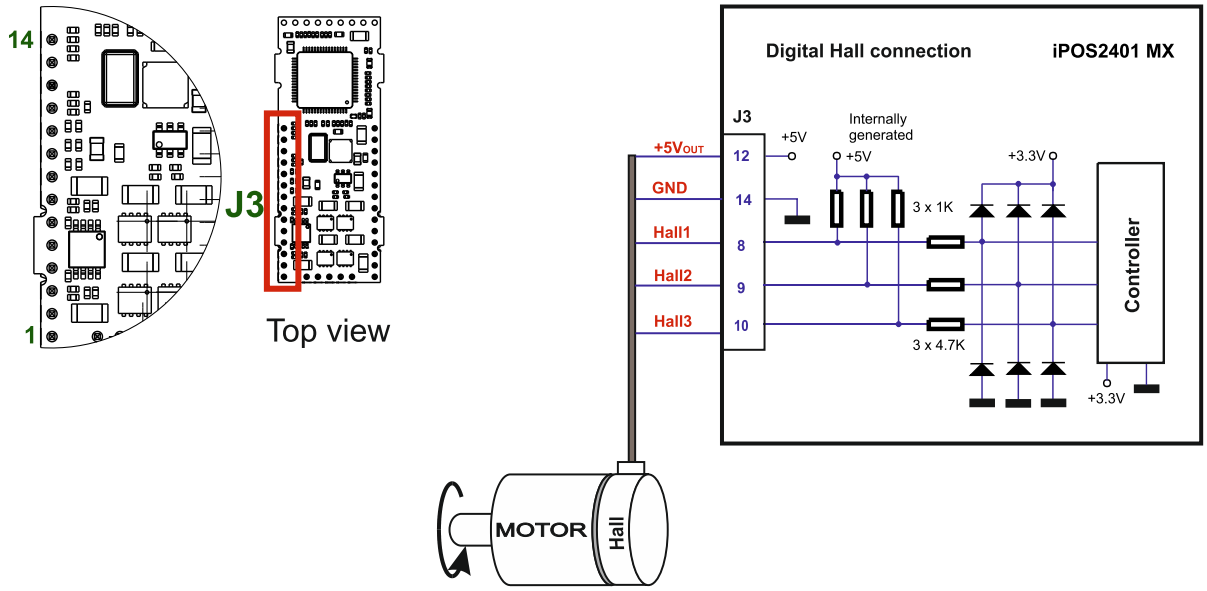

Figure 3.16. **Digital Hall connection**

Remarks:

1. *This connection is required when using Hall start method BLDC or PMSM and also for the Trapezoidal commutation method. The digital halls are not used in this case as a feedback measurement device. The actual motor control is done with an incremental encoder.*
2. *The length of the cables must be up to 30m, reducing the exposure to voltage surges in industrial environment.*

3.6.7.4 Digital Hall Connection for direct motor control without an encoder

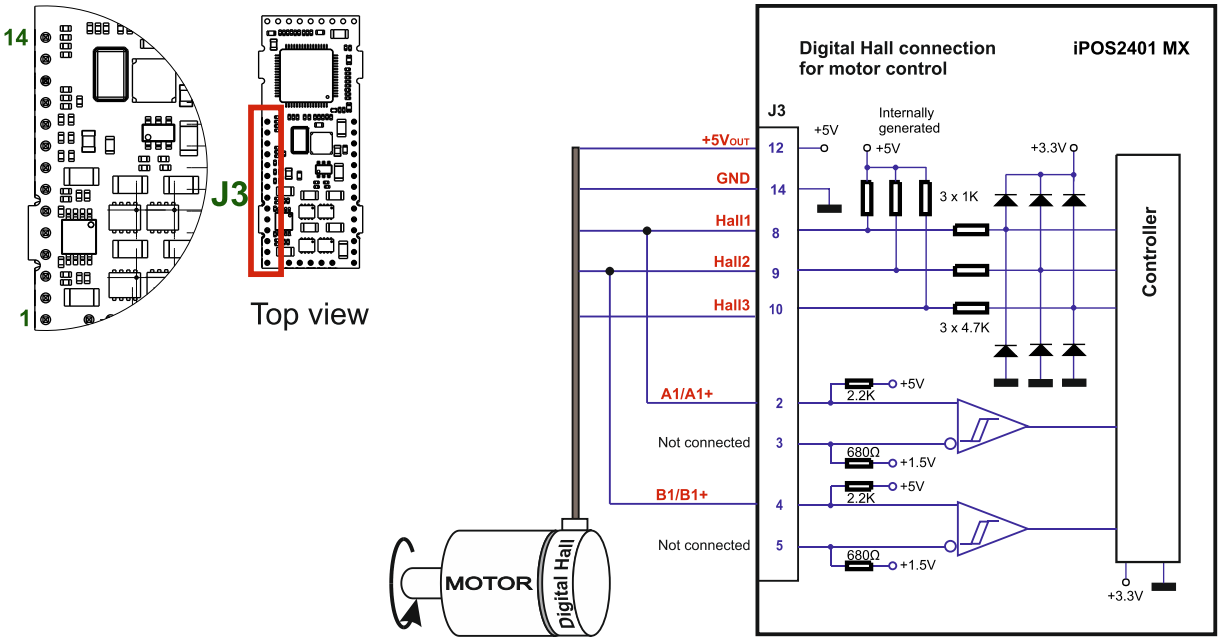

Figure 3.17. **Digital Hall connection**

Remarks:

1. *This connection is required when using only Digital hall signals as the main feedback device for motor control. In this case, no incremental encoder is needed.*
2. *Do not connect unterminated wires. They might pick up unwanted noise and give false encoder readings.*
3. *The length of the cables must be up to 30m, reducing the exposure to voltage surges in industrial environment.*

3.6.7.5 Linear Hall Connection

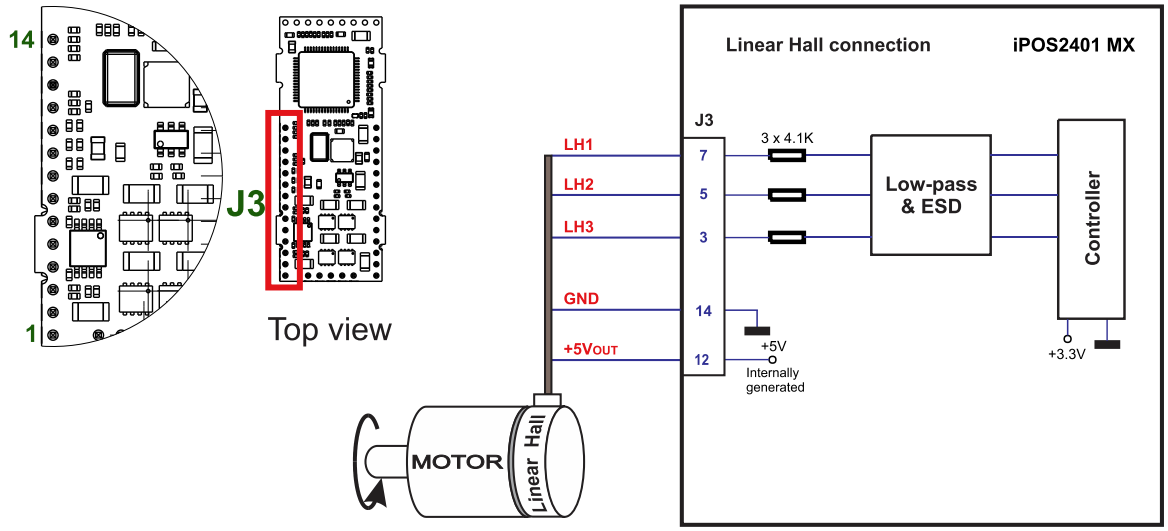

Figure 3.18. **Digital Hall connection**

3.6.7.6 Recommendations for wiring

a) Always connect both positive and negative signals when the position sensor is differential and provides them. Use one twisted pair for each differential group of signals as follows: A+ with A-, B+ with B-, Z+ with Z-. Use another twisted pair for the 5V supply and GND.

b) Always use shielded cables to avoid capacitive-coupled noise when using single-ended encoders or Hall sensors with cable lengths over 1 meter. Connect the cable shield to the GND, at only one end. This point could be either the iPOS2401 (using the GND pin) or the encoder / motor. Do not connect the shield at both ends.

c) If the iPOS2401 5V supply output is used by another device (like for example an encoder) and the connection cable is longer than 5 meters, add a decoupling capacitor near the supplied device, between the +5V and GND lines. The capacitor value can be 1...10 µF, rated at 6.3V.

3.6.8 Power Supply Connection

3.6.8.1 Supply Connection

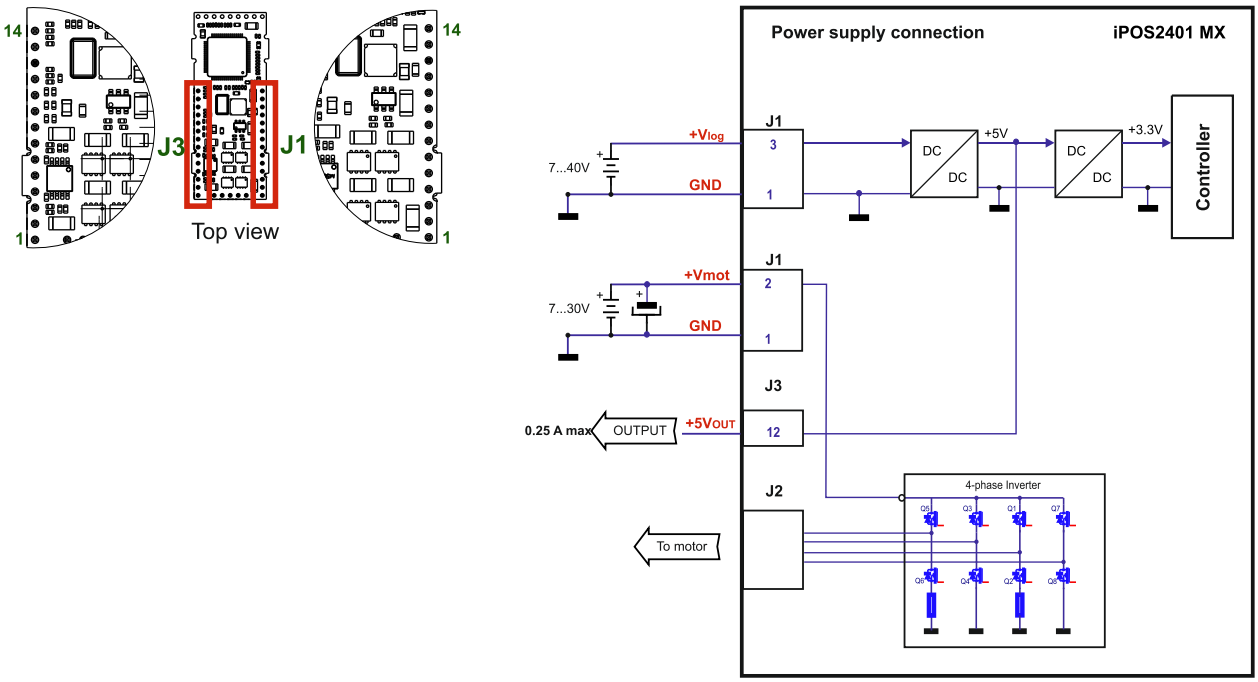

Figure 3.19. **Supply connection**

3.6.8.2 Recommendations for Supply Wiring

Always provide a nearby capacitor on the motor supply lines. The capacitor should be located within 10cm of the iPOS2401 connector, max. 20cm. The minimum recommended capacitance is 220µF for iPOS2401, always rated at the appropriate voltage.

Use short, thick wires between the iPOS2401 and the motor power supply. Connect power supply wires to all the indicated pins. If the wires are longer than 2 meters, use twisted wires for the supply and ground return. For wires longer than 20 meters, add a capacitor of at least 1000µF (rated at an appropriate voltage) right on the terminals of the iPOS2401.

3.6.8.3 Recommendations to limit over-voltage during energy regeneration

During abrupt motion decelerations or reversals the regenerative energy is injected into the motor power supply. This may cause an increase of the motor supply voltage (depending on the power supply characteristics). If the voltage bypasses 28V, the drive over-voltage protection is triggered and the drive power stage is disabled. In order to avoid this situation you have 2 options:

Option 1. Add a capacitor on the motor supply big enough to absorb the overall energy flowing back to the supply. The capacitor must be rated to a voltage equal or bigger than the maximum expected over-voltage and can be sized with the formula:

$$C \geq \frac{2 \times E_M}{U_{MAX}^2 - U_{NOM}^2}$$

where:

U_{MAX} = 28V is the over-voltage protection limit

U_{NOM} is the nominal motor supply voltage

E_M = the overall energy flowing back to the supply in Joules. In case of a rotary motor and load, E_M can be computed with the formula:

$$E_M = \underbrace{\frac{1}{2}(J_M + J_L)\varpi_M^2}_{\textit{Kinetic energy}} + \underbrace{(m_M + m_L)g(h_{initial} - h_{final})}_{\textit{Potential energy}} - \underbrace{3I_M^2 R_{Ph} t_d}_{\textit{Copper losses}} - \underbrace{\frac{t_d \varpi_M}{2} T_F}_{\textit{Friction losses}}$$

where:

J_M – total rotor inertia [kgm^2]

J_L – total load inertia as seen at motor shaft after transmission [kgm^2]

ϖ_M – motor angular speed before deceleration [rad/s]

m_M – motor mass [kg] – when motor is moving in a non-horizontal plane

m_L – load mass [kg] – when load is moving in a non-horizontal plane

g – gravitational acceleration i.e. 9.8 [m/s^2]

$h_{initial}$ – initial system altitude [m]

h_{final} – final system altitude [m]

I_M – motor current during deceleration [A_{RMS}/phase]

R_{Ph} – motor phase resistance [Ω]

t_d – time to decelerate [s]

T_F – total friction torque as seen at motor shaft [Nm] – includes load and transmission

In case of a linear motor and load, the motor inertia J_M and the load inertia J_L will be replaced by the motor mass and the load mass measured in [kg], the angular speed ϖ_M will become linear speed measured in [m/s] and the friction torque T_F will become friction force measured in [N].

Option 2. Connect a chopping resistor R_{CR} between phase CR/B- and ground, and activate the software option of dynamic braking (see below).

This option is not available when the drive is used with a step motor.

The chopping resistor option can be found in the Drive Setup dialogue within EasyMotion / EasySetup and it is called "External brake resistor".

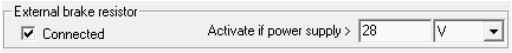

The chopping will occur when DC bus voltage increases over U_{CHOP}. This parameter (U_{CHOP}) should be adjusted depending on the nominal motor supply. Optimally (from a braking point of view), U_{CHOP} should be a few volts above the maximum nominal supply voltage. This setting will activate the chopping resistor earlier, before reaching dangerous voltages – when the over-voltage protection will stop the drive. Of course, U_{CHOP} must always be less than U_{MAX} – the over-voltage protection threshold.

Remark: *This option can be combined with an external capacitor whose value is not enough to absorb the entire regenerative energy E_M but can help reducing the chopping resistor size.*

Chopping resistor selection

The chopping resistor value must be chosen to respect the following conditions:

1. to limit the maximum current below the drive peak current I_{PEAK} = 0.9A

$$R_{CR} > \frac{U_{MAX}}{I_{PEAK}}$$

2. to sustain the required *braking power*:

$$P_{CR} = \frac{E_M - \frac{1}{2}C(U_{MAX}^2 - U_{CHOP}^2)}{t_d}$$

where C is the capacitance on the motor supply (external), i.e:

$$R_{CR} < \frac{U_{CHOP}^2}{2 \times P_{CR}}$$

3. to limit the average current below the drive nominal current I_{NOM}=0.9A

$$R_{CR} > \frac{P_{CR} \times t_d}{t_{CYCLE} \times I_{NOM}^2}$$

where t_{CYCLE} is the time interval between 2 voltage increase cycles in case of repetitive moves.

4. to be rated for an average power $P_{AV} = \frac{P_{CR} \times t_d}{t_{CYCLE}}$ and a peak power $P_{PEAK} = \frac{U_{MAX}^2}{R_{CR}}$

Remarks:

1. *If* $\frac{U_{MAX}}{I_{PEAK}} > \frac{U_{CHOP}^2}{2 \times P_{CR}}$ *the braking power P_{CR} must be reduced by increasing either t_d – the time to decelerate or C – the external capacitor on the motor supply*
2. *If* $\frac{P_{CR} \times t_d}{t_{CYCLE} \times I_{NOM}^2} > \frac{U_{CHOP}^2}{2 \times P_{CR}}$ *either the braking power must be reduced (see Remark 1) or t_{CYCLE} – the time interval between braking cycles must be increased*

	WARNING!	***THE CHOPPING RESISTOR MAY HAVE HOT SURFACES DURING OPERATION.***

3.6.9 Serial RS-232 connection

3.6.9.1 Serial RS-232 connection

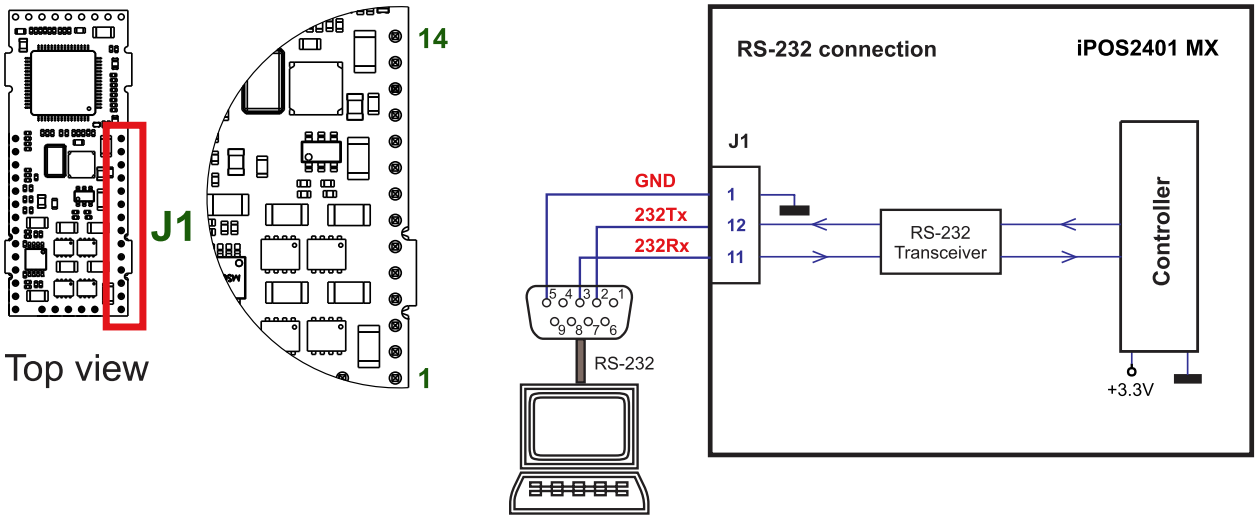

Figure 3.20. **Serial RS-232 connection**

3.6.9.2 Recommendation for wiring

a) If you build the serial cable, you can use a 3-wire shielded cable with shield connected to BOTH ends. Do not use the shield as GND. The ground wire (pin 1 of J1) must be included inside the shield, like the 232Rx and 232Tx signals
b) Always power-off all the iPOS2401 supplies before inserting/removing the RS-232 serial connector
c) Do not rely on an earthed PC to provide the iPOS2401 GND connection! The drive must be earthed through a separate circuit. Most communication problems are caused by the lack of such connection

3.6.10 CAN-bus connection (for CAN drives only)

3.6.10.1 CAN connection

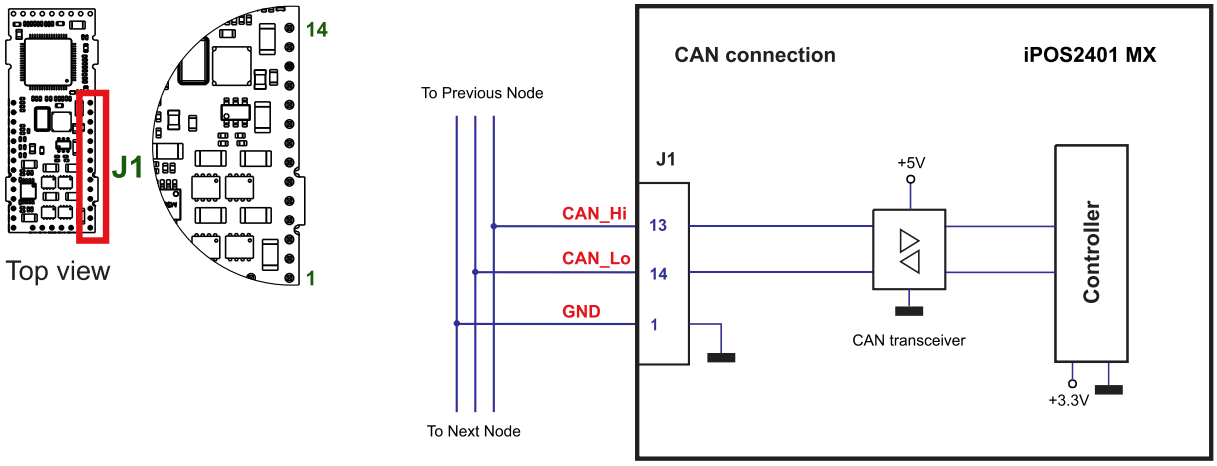

Figure 3.21. **CAN connection**

Remarks:

1. *The CAN network requires a 120-Ohm terminator. This is not included on the board. Figure 3.22 shows how to connect it on your network*
2. *CAN signals can sustain up to +/-58V without damage.*

3.6.10.2 Recommendation for wiring

a) Build CAN network using cables with twisted wires (2 wires/pair), with CAN-Hi twisted together with CAN-Lo. It is recommended but not mandatory to use a shielded cable. If so, connect the shield to GND. The cable impedance must be 105 ... 135 ohms (120 ohms typical) and a capacitance below 30pF/meter.

b) When using a printed circuit board (PCB) motherboard based on FR-4 material, build the CAN network using a pair of 12mil (0.012”) tracks, spaced 8 to 10mils (0.008”…0.010”) apart, placed over a local ground plane (microstrip) which extends at least 1mm left and right to the tracks.

c) Whenever possible, use daisy-chain links between the CAN nodes. Avoid using stubs. A stub is a "T" connection, where a derivation is taken from the main bus. When stubs can’t be avoided keep them as short as possible. For 1 Mbit/s (worst case), the maximum stub length must be below 0.3 meters.

d) The 120Ω termination resistors must be rated at 0.2W minimum. Do not use winded resistors, which are inductive.

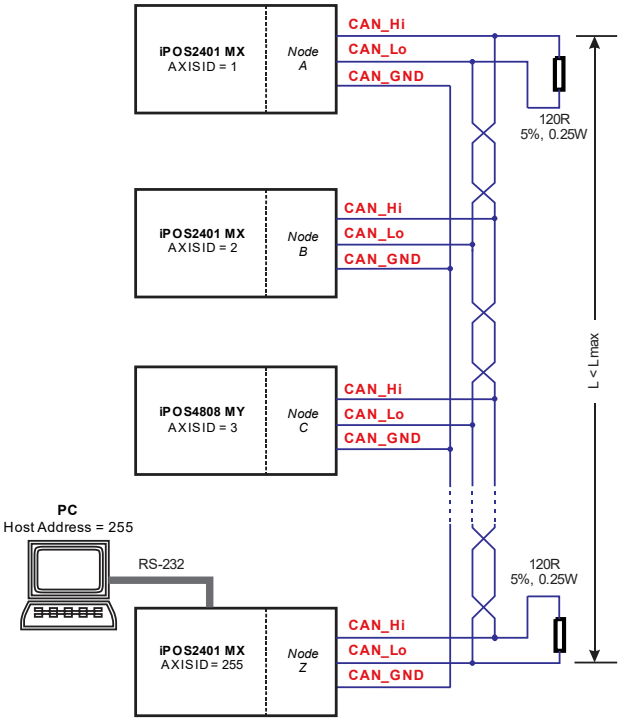

Figure 3.22. **Multiple-Axis CAN network**

3.6.11 EtherCAT bus connection (for CAT drives)

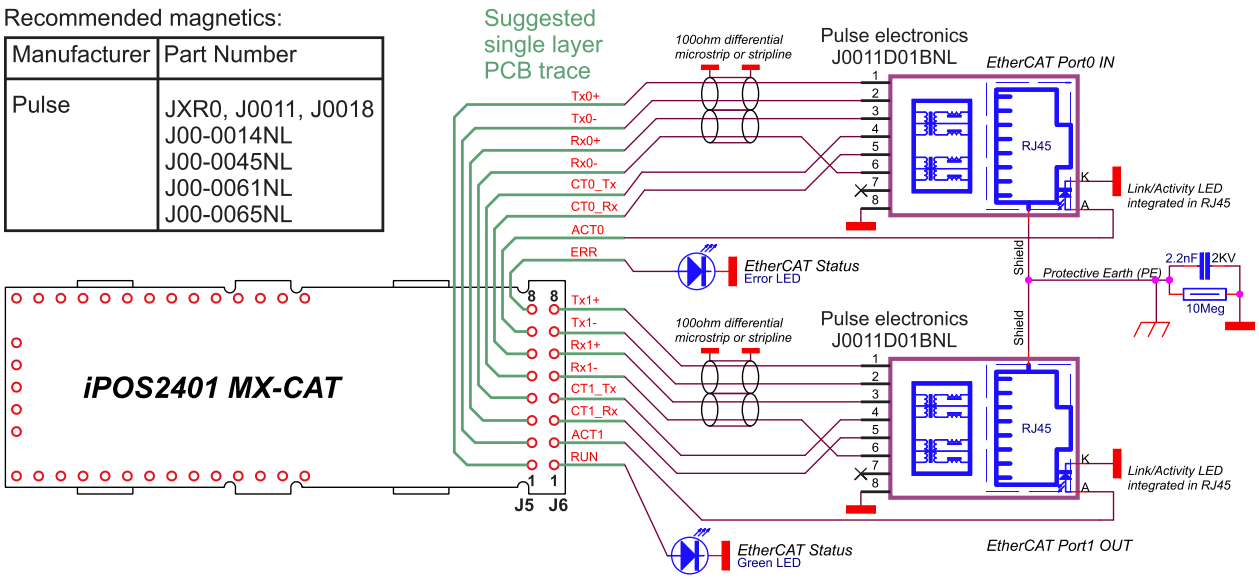

Figure 3.23. **EtherCAT bus to RJ45 connection PoE compliant**

3.6.12 Disable of Autorun Mode (for CAN) / Disable Setup (for CAT)

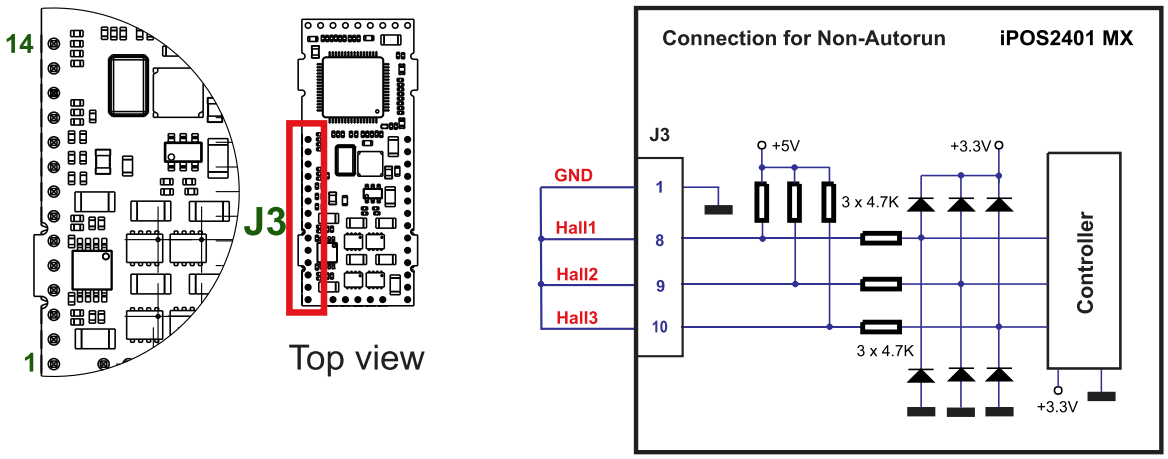

Figure 3.24. **Temporary connection during power-on to remove the drive from** Autorun **mode**

3.6.12.1 For CAN drives

When the iPOS2401 is set in TMLCAN operation mode, it enters by default after power on in *Autorun* mode, if the drive has in its local EEPROM a valid TML application (motion program), this is automatically executed as soon as the motor supply V_{MOT} is turned on.

In order to remove the drive from *Autorun*, you have 2 ways:

a) Software - by writing value 0x0001 in first EEPROM location, from address 0x4000;

b) Hardware – by temporary connecting all digital Hall inputs to GND, during the power on for about 1s (until the green led is turned on), as shown in *Figure 3.24*. This option is particularly useful when it is not possible to communicate with the drive.

After the drive is set in *non-Autorun/slave* mode using 2nd method, the 1st method may be used to invalidate the TML application from the EEPROM. On next power on, in absence of a valid TML application, the drive enters in the *non-Autorun/slave* mode independently of the digital Hall inputs status.

3.6.12.2 For EtherCAT drives

In some very rare cases, the setup table might be corrupted, leading to a loop where the drive resets continuously. This behavior can be noticed by seeing both the Ready and Error LED blinking for short periods of time continuously.

To recover from this behavior, the setup table can be invalidated by connecting all digital Hall inputs to GND, as shown in ***Figure 3.24***.

On the next power on, the drive will load setup default settings and the Motion Error Register (MER) bit 2 will be 1. After a new valid setup table is loaded onto the drive, disconnect the hall sensors from GND and execute a new power off/ power on cycle.

3.7 CAN Operation Mode and Axis ID Selection for CAN drives

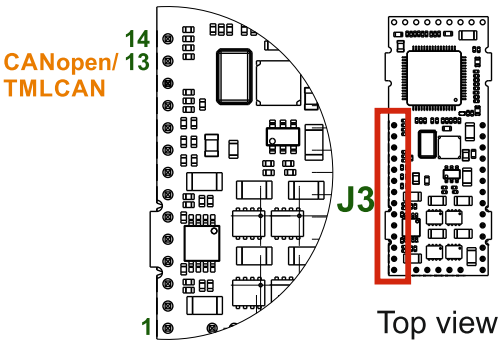

The communication protocol can be set by connecting J3 pin 13 to GND, +5V or leave disconnected.

For CANopen protocol, connect pin 13 of J3 to GND. All generated CAN messages will have an 11bit Identifier.

For TMLCAN protocol, leave pin13 of J3 disconnected or connect it to +5V to eliminate possible noise at sampling. All generated CAN messages will have a 29bit Identifier.

The pin will be sampled only at drive power up.

The default Axis ID will be:

255 when pin 13 is set for TMLCAN mode

127 when pin 13 is set for CANopen mode

The drive can have other Axis ID values only by software settings, with Easy Motion Studio or Easy Setup.

3.8 Electrical Specifications

All parameters measured under the following conditions (unless otherwise specified):

T_{amb} = 0…70°C, V_{LOG} = 24 V_{DC}; V_{MOT} = 24V_{DC}; Supplies start-up / shutdown sequence: -*any*-

Load current (sinusoidal amplitude / continuous BLDC,DC,stepper) = 0.9A iPOS2401

3.8.1 Operating Conditions

		Min.	Typ.	Max.	Units
Ambient temperature	iPOS2401 MX-CAN	0		+70	ºC
	iPOS2401 MX-CAT	0		+40	
Ambient humidity	Non-condensing	0		90	%Rh
Altitude / pressure[1]	Altitude (referenced to sea level)	-0.1	0 ÷ 2.5	[2]	Km
	Ambient Pressure	0 [2]	0.75 ÷ 1	10.0	atm

3.8.2 Storage Conditions

		Min.	Typ.	Max.	Units
Ambient temperature	iPOS2401 MX-CAN	-40		105	ºC
	iPOS2401 MX-CAT	-40		85	
Ambient humidity	Non-condensing	0		100	%Rh
Ambient Pressure		0		10.0	atm
ESD capability (Human body model)	Not powered; applies to any accessible part			±0.5	kV
	Original packaging			±15	kV

[1] iPOS2401 can be operated in vacuum (no altitude restriction), but at altitudes over 2,500m, current and power rating are reduced due to thermal dissipation efficiency.

3.8.3 Mechanical Mounting

		Min.	Typ.	Max.	Units
Airflow		natural convection, closed box			
Spacing required for horizontal mounting.	Between adjacent drives	4			mm
	Between drives and nearby walls	5			mm
	Space needed for drive removal	10			mm
	Between drives and roof-top	20			mm
Insertion force	Using recommended mating connectors		TBD	TBD	N
Extraction force		TBD	TBD		N

3.8.4 Environmental Characteristics

			Min.	Typ.	Max.	Units
Size (Length x Width x Height)	Global size	iPOS2401 MX-CAN	46.5 x 19.2 x 8.5			mm
			~1.83 x 0.76 x 0.33			inch
		iPOS2401 MX-CAT	50.5 x 19.2 x 13.6			mm
			~1.99 x 0.76 x 0.54			inch
Weight		iPOS2401 MX-CAN	<20			g
Cleaning agents	Dry cleaning is recommended		Only Water- or Alcohol- based			
Protection degree	According to IEC60529, UL508		IP00			-

3.8.5 Logic Supply Input (+V_{LOG})

			Min.	Typ.	Max.	Units
Supply voltage	Nominal values		6	24	39	V_{DC}
	Absolute maximum values, drive operating but outside guaranteed parameters		5.7		40	V_{DC}
	Absolute maximum values, continuous		-0.6		42	V_{DC}
	Absolute maximum values, surge (duration ≤ 10ms) †		-1		+45	V
	+V_{LOG} = 12V	iPOS2401 MX-CAN		75		mA
		iPOS2401 MX-CAT	110	140	460	
	+V_{LOG} = 24V	iPOS2401 MX-CAN		40	280	
		iPOS2401 MX-CAT	60	70	230	

3.8.6 Motor Supply Input (+V_{MOT})

			Min.	Typ.	Max.	Units
Supply voltage	Nominal values		6.5	24	28	V_{DC}
	Absolute maximum values, drive operating but outside guaranteed parameters		4.8		29	V_{DC}
	Absolute maximum values, continuous		-0.6		30	V_{DC}
	Absolute maximum values, surge (duration ≤ 10ms) †		-1		32	V
Supply current	Idle			10	25	mA
	Operating	iPOS2401	-0.9	±0.9	+0.9	A
	Absolute maximum value, short-circuit condition (duration ≤ 10ms) †	iPOS2401			4	A

3.8.7 Motor Outputs (A/A+, B/A-, C/B+, CR/B-)

			Min.	Typ.	Max.	Units
Nominal output current, continuous	for DC brushed, steppers and BLDC motors with Hall-based trapezoidal control				0.9	A
	for PMSM motors with FOC sinusoidal control (sinusoidal amplitude value)				0.9	
	for PMSM motors with FOC sinusoidal control (sinusoidal effective value)				0.64	
Motor output current, peak			-0.9		+0.9	A
Short-circuit protection threshold				±1.3		A
Short-circuit protection delay			5	10		µs
On-state voltage drop	Nominal output current; including typical mating connector contact resistance			±50	±100	mV
Off-state leakage current				±0.5	±1	mA
Motor inductance (phase-to-phase)	Recommended value, for ripple ±5% of measurement range; +V_{MOT} = 24 V	F_{PWM} = 20 kHz	160			µH
		F_{PWM} = 40 kHz	80			
		F_{PWM} = 60 kHz	60			
		F_{PWM} = 80 kHz	40			
		F_{PWM} = 100 kHz	30			
	Absolute minimum value, limited by short-circuit protection; +V_{MOT} = 24 V	F_{PWM} = 20 kHz	60			µH
		F_{PWM} = 40 kHz	20			
		F_{PWM} = 60 kHz	15			
		F_{PWM} = 80 kHz	8			
		F_{PWM} = 100 kHz	4			
Motor electrical time-constant (L/R)	Recommended value, for ±5% current measurement error due to ripple	F_{PWM} = 20 kHz	250			µs
		F_{PWM} = 40 kHz	125			
		F_{PWM} = 60 kHz	100			
		F_{PWM} = 80 kHz	63			
		F_{PWM} = 100 kHz	50			
Current measurement accuracy	FS = Full Scale			±4	±8	%FS

3.8.8 Digital Inputs (IN0, IN1, IN2/LSP, IN3/LSN, IN4, IN5/Enable)[1]

		Min.	Typ.	Max.	Units
Mode compliance		TTL / CMOS / LVTTL (3.3V) / Open-collector / NPN / 24V outputs			
Default state	Input floating (wiring disconnected)	Logic HIGH			
Input voltage	Logic "LOW"		0	0.8	V
	Logic "HIGH"	2	5÷24		
	Floating voltage (not connected)		3		
	Absolute maximum, continuous	-10		+30	
	Absolute maximum, surge (duration ≤ 1s) †	-20		+40	
Input current	Logic "LOW"; Pulled to GND		0.6	1	mA
	Logic "HIGH"; Internal 4.7KΩ pull-up to +3.3	0	0	0	
	Logic "HIGH"; Pulled to +5V		0.15	0.2	
	Logic "HIGH"; Pulled to +24V		2	2.5	
Input frequency		0		150	kHz
Minimum pulse width		3.3			µs
ESD protection	Human body model	±2			kV

3.8.9 Digital Outputs (OUT0, OUT1)

		Min.	Typ.	Max.	Units
Mode compliance	All outputs (OUT0, OUT1)	TTL / CMOS / Open-collector / NPN 24V			
Default state	Not supplied (+V_{LOG} floating or to GND)	High-Z (floating)			
	Immediately after power-up	Logic "HIGH"			
	Normal operation	Logic "HIGH"			
Output voltage	Logic "LOW"; output current = 0.5A			0.8	V
	Logic "HIGH"; output current = 0, no load	4	4.5	5	
	Logic "HIGH", external load to +V_{LOG}		V_{LOG}		
	Absolute maximum, continuous	-0.5		V_{LOG}+0.5	
	Absolute maximum, surge (duration ≤ 1s) †	-1		V_{LOG}+1	
Output current	Logic "LOW", sink current, continuous			0.5	A
	Logic "LOW", sink current, pulse ≤ 5 sec.			1	A
	Logic "HIGH", source current; external load to GND; V_{OUT} >= 2.0V			4	mA
	Logic "HIGH", leakage current; external load to +V_{LOG}; V_{OUT} = V_{LOG} max = 40V		0.1	0.2	mA
Minimum pulse width		2			µs
ESD protection	Human body model	±15			kV

3.8.10 Digital Hall Inputs (Hall1, Hall2, Hall3)

		Min.	Typ.	Max.	Units
Mode compliance		TTL / CMOS / Open-collector			
Default state	Input floating (wiring disconnected)	Logic HIGH			
Input voltage	Logic "LOW"		0	0.8	V
	Logic "HIGH"	2	5		
	Floating voltage (not connected)		4.4		
	Absolute maximum, surge (duration ≤ 1s) †	-10		+15	
Input current	Logic "LOW"; Pull to GND			1.2	mA
	Logic "HIGH"; Internal 1KΩ pull-up to +5	0	0	0	
Minimum pulse width		2			µs
ESD protection	Human body model	±5			kV

3.8.11 Linear Hall Inputs (LH1, LH2, LH3)

		Min.	Typ.	Max.	Units
Input voltage	Operational range	0	0.5÷4.5	4.9	V
	Absolute maximum values, continuous	-7		+7	
	Absolute maximum, surge (duration ≤ 1s)	-11		+14	
Input current	Input voltage 0…+5V	-1	±0.9	+1	mA
Interpolation resolution	Depending on software settings	9		13	bits
Frequency		0		4	kHz
ESD protection	Human body model	±15			kV

[1] The digital inputs are software selectable as PNP or NPN

3.8.12 Encoder Inputs (A+, A-, B+, B-, Z+, Z-,)[1]

		Min.	Typ.	Max.	Units
Single-ended mode compliance	Leave negative inputs disconnected	TTL / CMOS / Open-collector			
Input voltage, single-ended mode A/A+, B/B+	Logic "LOW"			1.6	V
	Logic "HIGH"	1.8			
	Floating voltage (not connected)		3.3		
Input voltage, single-ended mode Z/Z+	Logic "LOW"			1.2	V
	Logic "HIGH"	1.4			
	Floating voltage (not connected)		4.7		
Input current, single-ended mode A/A+, B/B+, Z/Z+	Logic "LOW"; Pull to GND		2.5	3	mA
	Logic "HIGH"; Internal 2.2KΩ pull-up to +5	0	0	0	
Differential mode compliance	For full RS422 compliance, see [2]	TIA/EIA-422-A			
Input voltage, differential mode	Hysteresis	±0.06	±0.1	±0.2	V
	Differential mode	-14		+14	
	Common-mode range (A+ to GND, etc.)	-7		+7	
Input impedance, differential	A+ to A-, B+ to B-, Z+ to Z-	2.7	2.8		kΩ
Input frequency	Single-ended mode, Open-collector / NPN	0		500	KHz
	Differential mode, or Single-ended driven by push-pull (TTL / CMOS)	0		12	MHz
Minimum pulse width	Single-ended mode, Open-collector / NPN	1			µs
	Differential mode, or Single-ended driven by push-pull (TTL / CMOS)	20			ns
Input voltage, any pin to GND	Absolute maximum values, continuous	-7		+7	V
	Absolute maximum, surge (duration ≤ 1s)†	-11		+14	
ESD protection	Human body model	±1			kV

3.8.13 Analog 0..5V/ ±10V Input (REF/FDBK)

			Min.	Typ.	Max.	Units
Input voltage	Operational range	0..5V mode	0		5	V
		±10V mode	-10		10	
	Absolute maximum values, continuous		-12		+18	
	Absolute maximum, surge (duration ≤ 1s)†				±36	
Input impedance	To +1.47V			41		kΩ
Resolution			12			bits
Integral linearity					±2	bits
Offset error				±2	±10	bits
Gain error				±1%	±3%	% FS[3]
Bandwidth (-3dB)	Software selectable		0		1	kHz
ESD protection	Human body model		±2			kV

3.8.14 RS-232

		Min.	Typ.	Max.	Units
Standards compliance		TIA/EIA-232-C			
Bit rate	Depending on software settings	9600		115200	Baud
Short-circuit protection	232TX short to GND	Guaranteed			
ESD protection	Human body model	±2			kV

3.8.15 CAN-Bus (for CAN drives)

		Min.	Typ.	Max.	Units
Compliance		ISO11898, CiA-301v4.2, 402v3.0			
Bit rate	Software selectable	125		1000	125
Bus length	1Mbps			40	m
	500Kbps			100	
	≤ 250Kbps			250	
Resistor	Between CAN-Hi, CAN-Lo	none on-board			
Node addressing	Hardware (CANopen selection pin)	127 (CANopen); 255 (TMLCAN)			
	Software	1 - 127 (CANopen); 1- 255 (TMLCAN)			
Voltage, CAN-Hi or CAN-Lo to GND		-58		58	V
ESD protection	Human body model	±15			kV

[1] Encoder differential input pins do not have internal 120Ω termination resistors connected across

[2] For full RS-422 compliance, 120Ω termination resistors must be connected across the differential pairs, as close as possible to the drive input pins. See *Figure 3.15. Differential incremental encoder connection*

[3] "FS" stands for "Full Scale"

3.8.16 Supply Output (+5V)

		Min.	Typ.	Max.	Units
+5V output voltage	Current sourced = 350mA	4.9	5	5.2	V
+5V output current	iPOS2401 MX-CAN	250	300		mA
	iPOS2401 MX-CAT	350	500	540	mA
Short-circuit protection		Yes / Drive resets at event			
Over-voltage protection		NOT protected			
ESD protection	Human body model	±15			kV

3.8.17 Ethernet ports (for CAT drives)

		Min.	Typ.	Max.	Units
Standard Compliance		CoE, EtherCAT (IEC61158-3/4/5/6-12)			
		Fast Ethernet 100BASE-TX (IEEE802.3u)			
		Auto-negotiation for 100Mbps/s full-duplex			
		Auto-detect MDI/MDI-X			
Magnetics requirements		Standard 100BASE-TX MDI/MDI-X			
	Primary inductance @8mA bias	350			µH
	Turns ratio (primary:secondary)	1CT:1			
	Symmetry (for MDI/MDI-X)	Symmetrical, RX=TX			
	CMRR 1-50MHz	30			dB
	Isolation@1 minute	2.25			kV
Maximum cable length	2-pair UTP Cat5	100	150		m
ESD protection	Human body model	TBD			kV

3.8.18 LED signals (for J5 and J6 of CAT drives)

		Min.	Typ.	Max.	Units
LED connection		Common cathode to GND			
		Direct, no series resistor			
Red color LED (ERR) current	VF(min) = 1.5V VF(max) = 3.0V	1	5	7	mA
Green color LED (RUN) current	VF(min) = 1.7V VF(max) = 3.0V	4	17	24	mA
Yellow color LED (ACT) current	VF(min) = 1.7V VF(max) = 3.0V	4	17	24	mA

† Stresses beyond values listed under “absolute maximum ratings” may cause permanent damage to the device. Exposure to absolute-maximum-rated conditions for extended periods may affect device reliability.

3.9 De-rating Curves

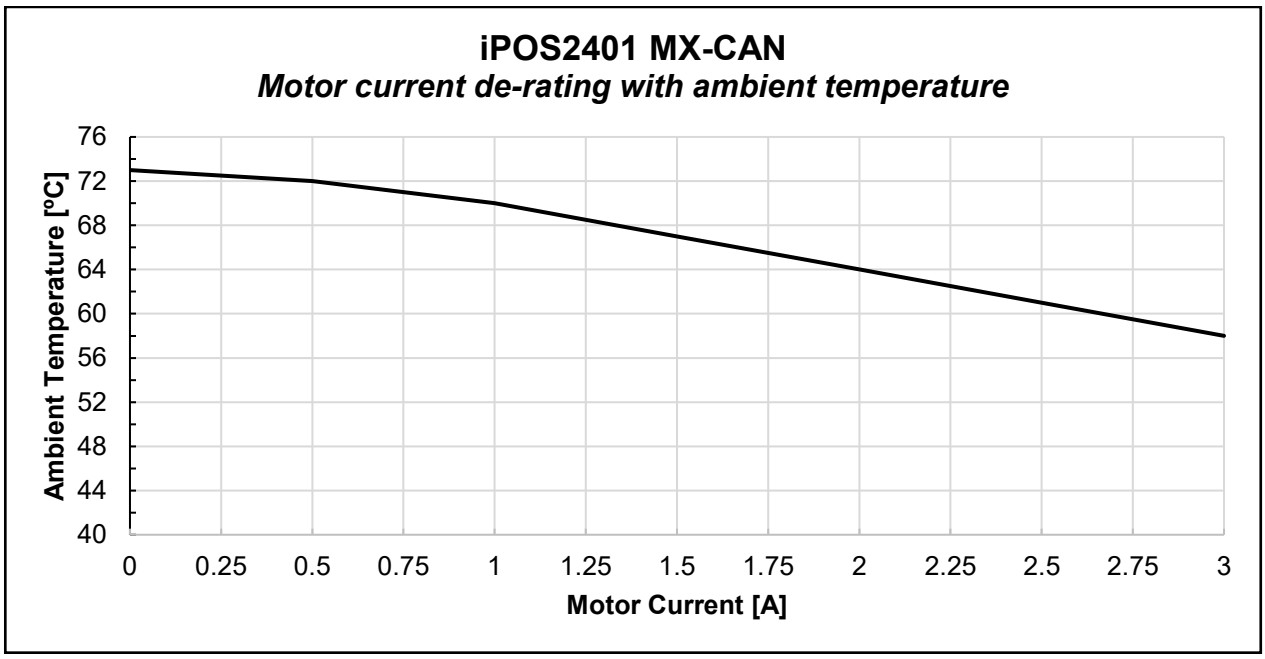

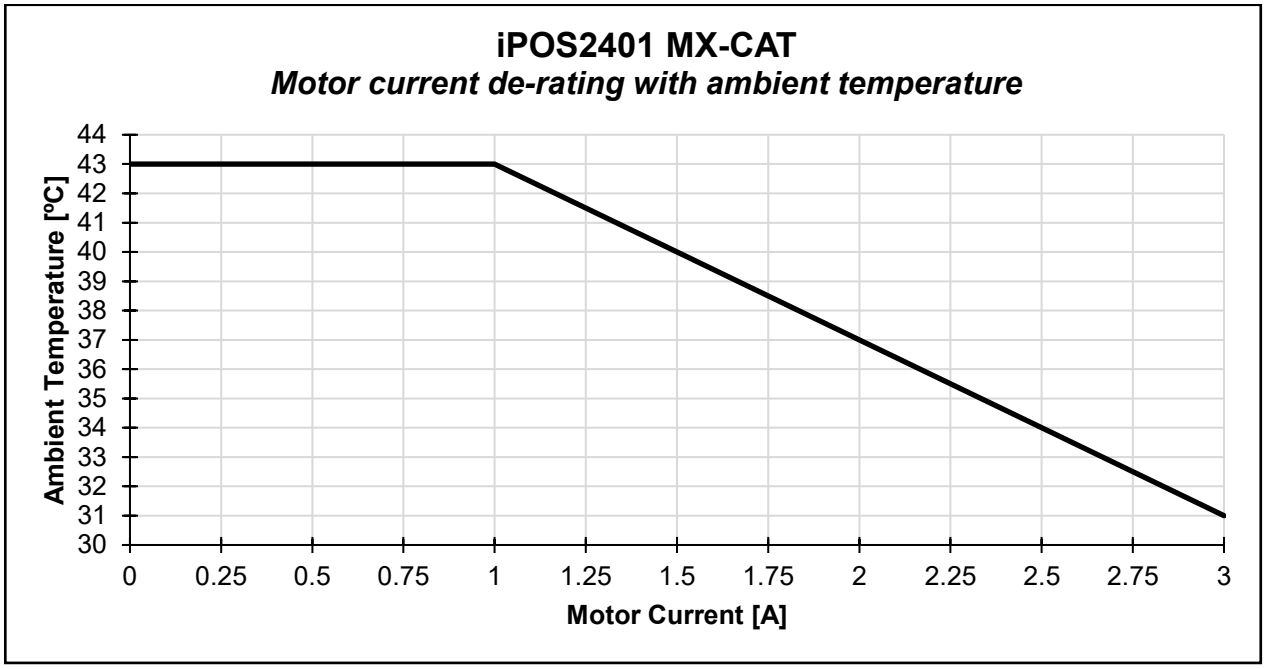

4 Memory Map

iPOS2401 MX has 2 types of memory available for user applications: 2K×16 SRAM and 4K×16 serial E^2ROM.

The SRAM memory is mapped in the address range: 9800h to 9FFFh. It can be used to download and run a TML program, to save real-time data acquisitions and to keep the cam tables during run-time.

The E^2ROM is mapped in the address range: 4000h to 4FFFh. It is used to keep in a non-volatile memory the TML programs, the cam tables and the drive setup information.

Remark: *EasyMotion Studio handles automatically the memory allocation for each motion application. The memory map can be accessed and modified from the main folder of each application*

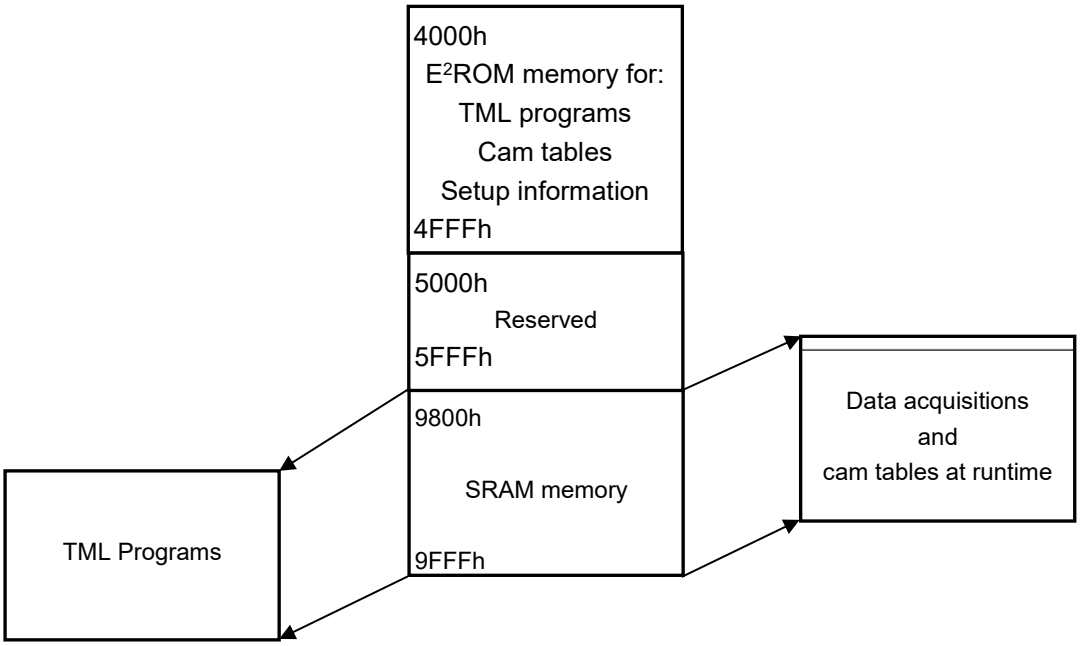

Figure 7.1. *iPOS2401 MX Memory Map*