Micro
MZ / PZ / CZ / LZ

Intelligent Servo Drive for Step, DC, Brushless DC and AC Motors

TECHNOSOFT
MOTION TECHNOLOGY

Intelligent Servo Drives

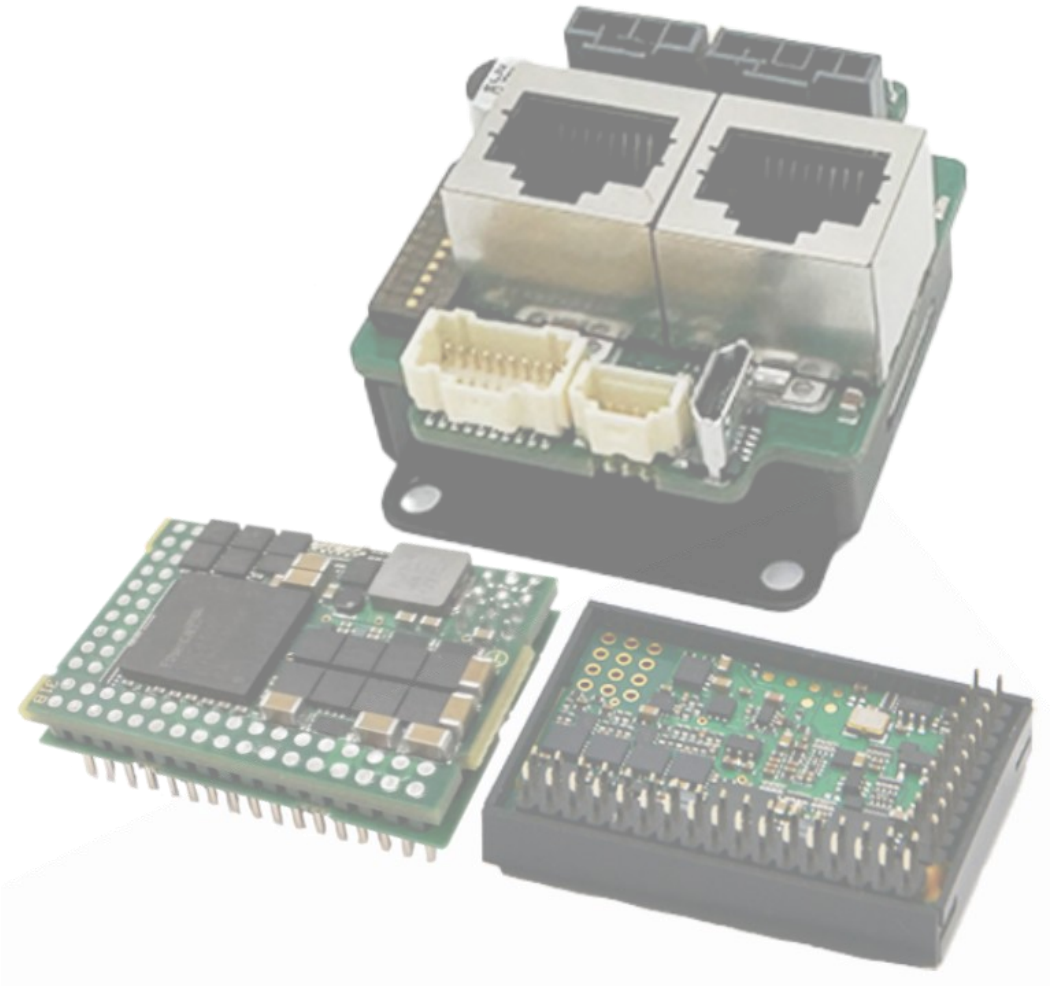

Technical Reference

© Technosoft 2025

P091.020.Micro MZ.PZ.CZ.LZ.UM.0525

Table of contents

Table of contents 2

Read This First 5

About This Manual 5

Notational Conventions 6

Trademarks 6

Related Documentation 6

If you Need Assistance … 8

1 Safety information 8

1.1 Warnings 8

1.2 Cautions 9

1.3 Quality system, conformance and certifications 9

2 Product Overview 10

2.1 Introduction 10

2.2 Product Features 11

2.3 Identification Labels 13

2.4 Supported Motor-Sensor Configurations 14

2.4.1 .....Single loop configurations 14

2.4.2 .....Dual loop configurations 14

3 Hardware Installation 15

3.1 Micro MZ Dimensions 15

3.2 Micro 4804 MZ-STO Dimensions 15

3.3 Micro LZ Dimensions 16

3.4 Micro 4804 PZ Dimensions 16

3.5 Micro 4804 PZ-STO Dimensions 17

3.6 Micro 4804 CZ-CAN and CZ-CAN-STO Dimensions 17

3.7 Micro 4804 CZ-CAT and CZ-CAT-STO Dimensions 18

3.8 Mechanical Mounting 18

3.8.1 .....Recommended spacing for Micro MZ/PZ/LZ 19

3.8.2 .....PCB Design 19

3.8.2.1 Motherboard PCB Design *21*

3.8.2.2 Recommendations for the PCB Design *21*

3.8.2.3 EtherCAT signals PCB routing indications *22*

3.9 Connectors and Pinouts 25

3.9.1 .....Pinouts for Micro 4804 MZ-CAN 25

3.9.2 .....Pinouts for Micro 4804 MZ-CAT 26

3.9.3 .....Pinouts for Micro 4803 MZ-CAN 27

3.9.4 .....Pinouts for Micro 4803 MZ-CAT 28

3.9.1 .....Pinouts for Micro 4804 MZ-CAN-STO 29

3.9.2 .....Pinouts for Micro 4804 MZ-CAT-STO 30

3.9.7 .....Pinouts for Micro 4804 LZ -CAN 35

3.9.8 .....Pinouts for Micro 4804 LZ-CAT 36

3.9.9 .....Pinouts for Micro 4803 LZ -CAN 37

3.9.10 .....Pinouts for Micro 4803 LZ-CAT 38
3.9.11 .....Pinouts for Micro 4804 CZ-CAN 39
3.9.1 .....Pinouts for Micro 4804 CZ-CAT 40
3.9.1 .....Pinouts for Micro 4804 CZ-CAN-STO 41
3.9.1 .....Pinouts for Micro 4804 CZ-CAT-STO 42
3.9.1 .....Mating Connectors for Micro MZ/PZ/LZ 43
3.9.2 .....Mating Connectors for Micro 4804 CZ 43

3.10 Connection diagrams 44
3.10.1 .....Micro 4804 MZ-CAN, Micro 4804 PZ-CAN and Micro 4803 MZ-CAN connection diagram 44
3.10.2 .....Micro 4804 MZ-CAT, Micro 4804 PZ-CAT and Micro 4803 MZ-CAT connection diagram 44
3.10.3 .....Micro 4804 MZ-CAN-STO and PZ-CAN-STO connection diagram 45
3.10.4 .....Micro 4804 MZ-CAT-STO and PZ-CAT-STO connection diagram 45
3.10.5 .....Micro 4804 LZ-CAN and Micro 4803 LZ-CAN connection diagram 46
3.10.6 .....Micro 4804 LZ-CAT and Micro 4803 LZ-CAT connection diagram 46
3.10.7 .....Micro 4804 CZ-CAN connection diagram 47
3.10.8 .....Micro 4804 CZ-CAT connection diagram 47
3.10.9 .....Micro 4804 CZ-CAN-STO connection diagram 48
3.10.10 ...Micro 4804 CZ-CAT-STO connection diagram 48

3.11 Digital I/O Connection 49
3.11.1 .....NPN inputs 49
3.11.2 .....NPN outputs 49
3.11.3 .....Solenoid driver connection for motor brake 50

3.12 Analog Inputs Connection 51
3.12.1.1 Recommendation for wiring 52

3.13 Motor connections 52
3.13.1 .....Brushless Motor connection 52
3.13.3 .....3-Phase Step Motor connection 54
3.13.4 .....DC Motor connection 55
3.13.4.1 Recommendations for motor wiring 55

3.14 Feedback connections 56
3.14.1 .....Feedback #1 - Single-ended Incremental Encoder Connection 56
3.14.2 .....Feedback #1 - Differential Incremental Encoder Connection 57
3.14.3 .....Feedback #2 - Single-ended Incremental Encoder Connection 58
3.14.4 .....Feedback #2 - Differential Incremental Encoder Connection 59
3.14.5 .....Feedback #1 – Absolute Encoder Connection: SSI, BiSS, EnDAT 60
3.14.7 .....Feedback #2 – Absolute Encoder Connection: SSI, BiSS, EnDAT 62
3.14.9 .....Linear (Analog) Hall Connection 64
3.14.10 ...Digital Hall Connection for Motor + Hall + Incremental or Absolute Encoder 65
3.14.11 ...Digital Hall Connection for Motor + Digital Hall only control 66
3.14.11.1 General recommendations for feedback wiring 66

3.15 Power Supply Connection 67
3.15.1.1 Recommendations for Supply Wiring 67
3.15.1.2 Recommendations to limit over-voltage during braking 68

3.16 USB connection 70

3.17 Serial RS-232 connection 71
3.17.1.1 Recommendation for wiring 71

3.18 CAN-bus connection 71
3.18.1.1 Recommendation for wiring 72

3.19 EtherCAT Connection 72
3.19.1 .....Recommendations for EtherCAT Wiring 72
3.19.2 .....EtherCAT signals schematic considerations 73

3.20 Disabling Autorun (for CAN drives); Disabling the setup table (for CAT drives) 74
3.20.1 .....Disabling Autorun (for CAN drives) 74
3.20.2 .....Disabling the setup table at startup (for CAT drives) 74

3.21 LED Indicators 75
3.21.1 .....EtherCAT® RUN and ERROR LED Indicators 76
3.22 Axis ID Selection and Operation Mode 76
3.22.1 .....Axis ID Selection for Micro MZ/LZ/PZ - CAT 76
3.22.2 .....Axis ID Selection for Micro MZ/PZ/LZ - CAN 77
3.22.3 .....Hardware Axis ID implementation for Micro MZ/PZ/LZ 78
3.22.4 .....Axis ID Selection for Micro 4804 CZ - CAT 80
3.22.5 .....Axis ID Selection and Operation Mode for Micro 4804 CZ - CAN 80

4 Electrical Specifications 81
4.1 Operating Conditions 81
4.2 Storage Conditions 81
4.3 Mechanical Mounting for Micro MZ / PZ / LZ 81
4.4 Mechanical Mounting for Micro 4804 CZ 81
4.1 Logic Supply Input ($+V_{LOG}$) 81
4.2 Motor Supply Input ($+V_{MOT}$) 81
4.3 Environmental Characteristics 82
4.4 Digital Inputs (IN0, IN1, IN2/LSP, IN3/LSN, IN4, IN5/ENA) 82
4.5 Motor Outputs (A/A+, B/A-, C/B+, CR/B-[2]) 83
4.6 Digital Outputs (OUT0, OUT1, OUT4) 83
4.7 Digital Hall Inputs (Hall1, Hall2, Hall3) 83
4.8 Encoder Inputs (A1+, A1-, B1+, B1-, Z1+, Z1-, A2+, A2-, B2+, B2-) 84
4.9 Analog Input (REF,FDBK) 84
4.10 SSI/BiSS/Panasonic/ EnDAT/Nikon/Sanyo Denki encoder interface 84
4.11 Supply Output (+5V) 84
4.12 LED Outputs for Micro MZ / LZ / PZ 85
4.1 AxisID inputs for Micro MZ / LZ / PZ 85
4.1 BFS input for Micro MZ / LZ / PZ 85
4.2 .RS-232 85
4.3 USB 85
4.4 CAN-Bus for for Micro MZ / PZ / LZ - CAN 85
4.1 EtherCAT ports for Micro 4804 CZ-CAT 85
4.2 EtherCAT ports for Micro MZ / PZ / LZ - CAT 86
4.3 Safe Torque OFF (STO1+; STO1-; STO2+; STO2-) for STO executions 86

5 De-rating curves for Micro 4804 MZ / LZ 87

6 De-rating curves for Micro 4804 PZ / CZ 88

7 De-rating curves for Micro 4803 MZ / LZ 89

8 Memory Map 90

Read This First

Whilst Technosoft believes that the information and guidance given in this manual is correct, all parties must rely upon their own skill and judgment when making use of it. Technosoft does not assume any liability to anyone for any loss or damage caused by any error or omission in the work, whether such error or omission is the result of negligence or any other cause. Any and all such liability is disclaimed. All rights reserved. No part or parts of this document may be reproduced or transmitted in any form or by any means, electrical or mechanical including photocopying, recording or by any information-retrieval system without permission in writing from Technosoft S.A. The information in this document is subject to change without notice.

About This Manual

This book is a technical reference manual for:

Product Name	Part Number	Description	Communication
Micro 4804 MZ-CAT	P020.002.E122	Pins Version	RS232, USB, EtherCAT®
Micro 4804 MZ-CAN	P020.002.E102		RS232; USB; CAN
Micro 4803 MZ-CAT	P020.001.E122	Pins Version	RS232, USB, EtherCAT®
Micro 4803 MZ-CAN	P020.001.E102		RS232; USB; CAN
Micro 4804 MZ-CAT-STO	P020.003.E122	Pins Version STO	RS232, USB, EtherCAT®
Micro 4804 MZ-CAN-STO	P020.003.E102		RS232; USB; CAN
Micro 4804 PZ-CAT	P020.002.E322	Enhanced Pins Version	RS232, USB, EtherCAT®
Micro 4804 PZ-CAN	P020.002.E302		RS232; USB; CAN
Micro 4804 PZ-CAT-STO	P020.003.E322	Enhanced Pins Version STO	RS232, USB, EtherCAT®
Micro 4804 PZ-CAN-STO	P020.003.E302		RS232; USB; CAN
Micro 4804 CZ-CAT	P020.802.E222	Standalone Version	RS232, USB, EtherCAT®
Micro 4804 CZ-CAN	P020.802.E202		RS232; USB; CAN
Micro 4804 CZ-CAT-STO	P020.803.E222	Standalone Version STO	RS232, USB, EtherCAT®
Micro 4804 CZ-CAN-STO	P020.803.E202		RS232; USB; CAN
Micro 4804 LZ-CAT	P020.022.E122	Lite Version	USB; EtherCAT®
Micro 4804 LZ-CAN	P020.022.E102		USB; CAN
Micro 4803 LZ-CAT	P020.012.E122	Lite Version	USB; EtherCAT®
Micro 4803 LZ-CAN	P020.012.E102		USB; CAN

In order to operate the **Micro** drives, you need to pass through 3 steps:

- **Step 1 Hardware installation**
- **Step 2 Drive setup** using Technosoft **EasyMotion Studio II** software for drive commissioning
- **Step 3 Motion programming** using one of the options:
  - **CANopen master**[1] or an **EtherCAT® master**[2]
  - The drives **built-in motion controller** executing a Technosoft Motion Language (**TML**) program developed using Technosoft **EasyMotion Studio II** software
  - A TML_LIB motion library for PCs (Windows or Linux)[3]
  - A TML_LIB motion library for PLCs[3]
  - A **distributed control** approach which combines the above options, like for example a host calling motion functions programmed on the drives in TML

This manual covers **Step 1** in detail. It describes the **Micro** hardware including the technical data, the connectors and the wiring diagrams needed for installation.

For **Step 2 and 3**, please consult the document ***EasyMotion Studio II – Quick Setup and Programming Guide.*** For detailed information regarding the next steps, refer to the related documentation.

[1] When Micro CAN is set in CANopen mode.
[2] When Micro CAT is used.
[3] Available for Micro CAN executions.

Notational Conventions

This document uses the following conventions:

- **Micro**– all products described in this manual
- **IU** units – Internal units of the drive
- **SI** units – International standard units (meter for length, seconds for time, etc.)
- **STO** – Safe Torque Off
- **TML** – Technosoft Motion Language
- **CANopen** – Standard communication protocol that uses 11-bit message identifiers over CAN-bus
- **TMLCAN** – Technosoft communication protocol for exchanging TML commands via CAN-bus, using 29bit message identifiers
- **CoE** – CAN application protocol over EtherCAT

Trademarks

EtherCAT® is registered trademark and patented technology, licensed by Beckhoff Automation GmbH, Germany.

Related Documentation

Micro 4804 MZ-CAT Datasheet (P020.002.E122.DSH)
Micro 4804 MZ-CAN Datasheet (P020.002.E102.DSH)
Micro 4803 MZ-CAT Datasheet (P020.001.E122.DSH)
Micro 4803 MZ-CAN Datasheet (P020.001.E102.DSH)
Micro 4804 MZ-CAT-STO Datasheet (P020.003.E122.DSH)
Micro 4804 MZ-CAN-STO Datasheet (P020.002.E102.DSH)
Micro 4804 PZ-CAT Datasheet (P020.002.E322.DSH)
Micro 4804 PZ-CAN Datasheet (P020.002.E302.DSH)
Micro 4804 PZ-CAT-STO Datasheet (P020.003.E322.DSH)
Micro 4804 PZ-CAN-STO Datasheet (P020.003.E302.DSH)
Micro 4804 CZ-CAT Datasheet (P020.802.E222.DSH)
Micro 4804 CZ-CAN Datasheet (P020.802.E202.DSH)
Micro 4804 CZ-CAT-STO Datasheet (P020.803.E222.DSH)
Micro 4804 CZ-CAN-STO Datasheet (P020.803.E202.DSH)
Micro 4804 LZ-CAT Datasheet (P020.022.E122.DSH)
Micro 4804 LZ-CAN Datasheet (P020.022.E102.DSH)
Micro 4803 LZ-CAT Datasheet (P020.012.E122.DSH)
Micro 4803 LZ-CAN Datasheet (P020.012.E102.DSH)

– describes the hardware connections of the Micro 4804 family of intelligent servo drives including the technical data and connectors.

EasyMotion Studio II – Quick Setup and Programming Guide (P091.034.ESM II - Quick.Setup.and.Programming.Guide.xxxx)

– describes the compatible software installation, drive software setup commissioning, introduction to TML motion programming and motion evaluation tools.

iPOS family Safe Torque Off (STO) Operating instructions (091.099.STO.Operating.Instructions.xxxx)

– describes the principles of STO function, the applied standards, the safety-related data and the electrical data. It presents the requested information for installation and commissioning of STO function

Help of the EasyMotion Studio II software – **EasyMotion Studio II** simplifies the setup process for any Technosoft drive, enabling quick configuration. The software generates setup data that can be downloaded into the drive's EEPROM or saved as a file on a PC. Upon power-up, the drive initializes with the setup data read from its EEPROM. Additionally, EasyMotion Studio II allows retrieval of complete setup information from a previously programmed drive. The **LITE version of EasyMotion Studio II** is available for free download from the Technosoft website.

Motion Programming using EasyMotion Studio (part no. P091.034.ESM.UM.xxxx) – describes how to use the EasyMotion Studio to create motion programs using in Technosoft Motion Language (TML). EasyMotion Studio platform includes a **Motion Wizard** for the motion programming. The Motion Wizard provides a simple, graphical way of creating motion programs and automatically generates all the TML instructions. *With EasyMotion Studio you can fully benefit from a key advantage of Technosoft drives – their capability to execute complex motions without requiring an external motion controller, thanks to their built-in motion controller.*

iPOS CANopen Programming **(part no. P091.063.iPOS.UM.xxxx)** – explains how to program the iPOS family of intelligent drives using **CANopen** protocol and describes the associated object dictionary for **CiA 301 v.4.2** application layer and communication profile, **CiA WD 305 v.2.2.13** layer settings services and protocols and **CiA DSP 402 v3.0** device profile for drives and motion control now included in IEC 61800-7-1 Annex A, IEC 61800-7-201 and IEC 61800-7-301 standards

iPOS CoE Programming (part no. P091.064.UM.0919) – describes how to program the Technosoft intelligent drives equipped with EtherCAT® communication interface. These drives support CAN application protocol over EtherCAT® (CoE) in conformance with CiA 402 device profile. The manual presents the object dictionary associated with this profile. The manual also explains how to combine the Technosoft Motion Language and the CoE commands in order to distribute the application between the EtherCAT® master and the Technosoft drives.

***TML_LIB v2.0* (part no. P091.040.v20.UM.xxxx)** – explains how to program in **C, C++,C#, Visual Basic or Delphi Pascal** a motion application for the Technosoft intelligent drives using TML_LIB v2.0 motion control library for PCs. The TML_lib includes ready-to-run examples that can be executed on **Windows** or **Linux** (x86 and x64).

***TML_LIB_LabVIEW v2.0* (part no. P091.040.LABVIEW.v20.UM.xxxx)** – explains how to program in **LabVIEW** a motion application for the Technosoft intelligent drives using TML_LIB_LabVIEW v2.0 motion control library for PCs. The TML_Lib_LabVIEW includes over 40 ready-to-run examples.

***TML_LIB_S7* (part no. P091.040.S7.UM.xxxx)** – explains how to program in a PLC **Siemens series S7-300 or S7-400** a motion application for the Technosoft intelligent drives using TML_LIB_S7 motion control library. The TML_LIB_S7 library is **IEC61131-3 compatible**.

***TML_LIB_CJ1* (part no. P091.040.CJ1.UM.xxxx)** – explains how to program in a PLC **Omron series CJ1** a motion application for the Technosoft intelligent drives using TML_LIB_CJ1 motion control library for PLCs. The TML_LIB_CJ1 library is **IEC61131-3 compatible**.

***TML_LIB_X20* (part no. P091.040.X20.UM.xxxx)** – explains how to program in a PLC **B&R series X20** a motion application for the Technosoft intelligent drives using TML_LIB_X20 motion control library for PLCs. The TML_LIB_X20 library is **IEC61131-3 compatible**.

If you Need Assistance …

If you want to …	Contact Technosoft at …
Visit Technosoft online	World Wide Web: http://www.technosoftmotion.com/
Receive general information or assistance (see Note)	World Wide Web: http://www.technosoftmotion.com/ Email: sales@technosoftmotion.com
Ask questions about product operation or report suspected problems (see Note)	Tel: +41 (0)32 732 5500 Email: support@technosoftmotion.com
Make suggestions about, or report errors in documentation.	Mail: Technosoft SA Avenue des Alpes 20 CH-2000 Neuchatel, NE Switzerland

1 Safety information

Read carefully the information presented in this chapter before carrying out the drive installation and setup! It is imperative to implement the safety instructions listed hereunder.
This information is intended to protect you, the drive and the accompanying equipment during the product operation. Incorrect handling of the drive can lead to personal injury or material damage.

The following safety symbols are used in this manual:

WARNING!	***SIGNALS A DANGER TO THE OPERATOR WHICH MIGHT CAUSE BODILY INJURY. MAY INCLUDE INSTRUCTIONS TO PREVENT THIS SITUATION***
CAUTION!	***SIGNALS A DANGER FOR THE DRIVE WHICH MIGHT DAMAGE THE PRODUCT OR OTHER EQUIPMENT. MAY INCLUDE INSTRUCTIONS TO AVOID THIS SITUATION***
CAUTION!	***Indicates areas SENSITIVE TO electrostatic discharges (ESD) WHICH REQUIRE HANDLING IN AN ESD PROTECTED ENVIRONMENT***

1.1 Warnings

WARNING!	***THE VOLTAGE USED IN THE DRIVE MIGHT CAUSE ELECTRICAL SHOCKS. DO NOT TOUCH LIVE PARTS WHILE THE POWER SUPPLIES ARE ON***

WARNING!	***TO AVOID ELECTRIC ARCING AND HAZARDS, NEVER CONNECT / DISCONNECT WIRES FROM THE DRIVE WHILE THE POWER SUPPLIES ARE ON***

WARNING!	***THE DRIVE MAY HAVE HOT SURFACES DURING OPERATION.***

WARNING!	***DURING DRIVE OPERATION, THE CONTROLLED MOTOR WILL MOVE. KEEP AWAY FROM ALL MOVING PARTS TO AVOID INJURY***

1.2 Cautions

CAUTION!	***THE POWER SUPPLIES CONNECTED TO THE DRIVE MUST COMPLY WITH THE PARAMETERS SPECIFIED IN THIS DOCUMENT***

CAUTION!	***TROUBLESHOOTING AND SERVICING ARE PERMITTED ONLY FOR PERSONNEL AUTHORISED BY TECHNOSOFT***

CAUTION!	***THE DRIVE CONTAINS ELECTROSTATICALLY SENSITIVE COMPONENTS WHICH MAY BE DAMAGED BY INCORRECT HANDLING. THEREFORE THE DRIVE SHALL BE REMOVED FROM ITS ORIGINAL PACKAGE ONLY IN AN ESD PROTECTED ENVIRONMENT***

To prevent electrostatic damage, avoid contact with insulating materials, such as synthetic fabrics or plastic surfaces. In order to discharge static electricity build-up, place the drive on a grounded conductive surface and also ground yourself.

1.3 Quality system, conformance and certifications

qualityaustria Succeed with Quality IQNet	**IQNet** and **Quality Austria** certification about the implementation and maintenance of the Quality Management System which fulfills the requirements of Standard **ISO 9001:2015**.
	Quality Austria Certificate about the application and further development of an effective **Quality Management System** complying with the requirements of Standard **ISO 9001:2015**
REACH COMPLIANT	**REACH Compliance -** TECHNOSOFT hereby confirms that this product comply with the legal obligations regarding Article 33 of the European REACH Regulation 1907/2006 (Registration, Evaluation, Authorization and Restriction of Chemicals), which came into force on 01.06.2007.
ROHS COMPLIANT	**RoHS Compliance -** Technosoft SA here with declares that this product is manufactured in compliance with the RoHS directive 2002/95/EC on the restriction of the use of certain hazardous substances in electrical and electronic equipment (RoHS)
CE	Technosoft SA hereby declares that this product conforms to the following European applicable directives: **2014/30/EU** **Electromagnetic Compatibility (EMC) Directive** **2014/35/EU** **Low Voltage Directive (LVD)** **93/68/EEC** **CE Marking Directive**
CONFLICT MINERALS	**Conflict minerals statement -** Technosoft declares that the company does not purchase 3T&G (tin, tantalum, tungsten & gold) directly from mines or smelters... We have no indication that Technosoft products contain minerals from conflict mines or smelters in and around the DRC.

For other certifications visit: https://technosoftmotion.com/en/quality/

2 Product Overview

2.1 Introduction

The **Micro** family of fully digital intelligent servo drives that combine the latest DSP technology with an integrated motion controller, delivering exceptional drive performance in a compact size.

Suitable for controlling **brushless DC**, **brushless AC** (vector control), **DC brushed** motors, and **step**[1] motors, the Micro accepts various types of position feedback, including incremental encoders (quadrature), absolute encoders[2] (SSI, BiSS, Panasonic, Tamagawa, EnDAT, Nikon, Sanyo Denki), and digital or linear Hall signals[2].

All drives perform position, speed or torque control and work in single, multi-axis or stand-alone configurations. Thanks to the embedded motion controller, the Micro drives combine controller, drive and PLC functionality in a single compact unit and are capable to execute complex motions without requiring intervention of an external motion controller. Using the high-level Technosoft Motion Language (TML) the following operations can be executed directly at drive level:

- Configuring various motion modes (profiles, PVT, PT, electronic gearing[3] or camming[3], etc.)
- Switching between motion modes and adjusting motion parameters.
- Executing homing sequences
- Controlling the program flow through:
  - Conditional jumps and calls of TML functions
  - TML interrupts triggered by pre-defined or programmable conditions (e.g., protection triggers, limit switch transitions, or capture inputs)
  - Waits for programmed events to occur
- Managing digital I/O and analog input signals.
- Executing arithmetic and logic operations
- Transferring data between axes
- Controlling the motion of one axis from another via inter-axis motion commands
- Sending commands to a group of axes (multicasting), including the ability to start motion sequences on all axes in the group simultaneously
- Synchronizing all the axes from a network

By implementing motion sequences directly at the drive level, intelligence can be effectively distributed between the master and the drives in complex multi-axis applications, significantly reducing both development time and overall communication requirements. For instance, rather than commanding each movement of an axis individually, the drives can be programmed using TML to execute complex motion tasks autonomously and notify the master upon completion. Consequently, the master's role in controlling each axis is minimized to simply calling TML functions stored in the drive's EEPROM and awaiting a confirmation message indicating the completion of these functions.

All Micro CAT drives are equipped with an EtherCAT® communication interface that provides support for:

- **FoE (File-over-EtherCAT)**
- **EoE (Ethernet-over-EtherCAT)**
- **CoE (CAN application protocol over EtherCAT)**

All Micro CAN drives are equipped with a **CAN 2.0B** interface that can be set to operate in 2 communication protocol modes:

- **CANopen**
- **TMLCAN**

When **CANopen** mode is selected, the drive conforms to **CiA 301 v4.2** application layer communication profile, the **CiA WD 305 v2.2.13** and **CiA DSP 402 v4.1.1** device profile for drives and motion control, now included in IEC 61800-7-1 Annex A, IEC 61800-7-201 and IEC 61800-7-301 standards. In this mode, the drive may be controlled via a CANopen master. The drive offers the possibility for a CANopen master to call motion sequences/ functions, written in TML and stored in the drive EEPROM, using manufacturer specific objects. Also, the drives can communicate separately between each other by using non reserved 11 bit identifiers.

When **TMLCAN** mode is selected, the unit behaves as standard Technosoft intelligent drive and conforms to Technosoft protocol for exchanging **TML commands via CAN-bus**. When TMLCAN protocol is used, it is not mandatory to have a master. Any drive can be set to operate standalone, and may play the role of a master to

[1] Step motors are exclusively available for the Micro 4804.

[2] Absolute encoders and Linear Halls are unavailable for Micro LZ executions.

[3] Available if the master axis sends its position via a communication channel, or by using the secondary encoder input

coordinate both the network communication/synchronization and the motion application via **TML commands** sent directly to the other drives.

For higher-level coordination, besides a master, the Micro drives can also be controlled via a PC or PLC using one of the **TML_LIB motion libraries**.

For commissioning the Micro, the EasyMotion Studio II PC application is available in two versions: LITE and FULL.

The LITE version simplifies the setup process for any Technosoft drive, enabling quick **commissioning**. It generates setup data that can be downloaded into the drive's EEPROM or saved as a file on a PC. Upon power-up, the drive initializes with the setup data from its EEPROM. Additionally, the LITE version allows for the retrieval of complete setup information from a previously programmed drive and is available for free download from the Technosoft website.

The FULL version of EasyMotion Studio II is designed for **commissioning** and **advanced motion programming**. It supports the development of complex motion programs using TML, which are executed locally by the drive's integrated motion controller.

While the LITE version includes only the setup functionality, making it suitable for scenarios where motion programming is managed through a CANopen/EtherCAT master or a PC/PLC using Technosoft's TML_LIB motion libraries, it can be upgraded to the FULL version by entering a **license number** obtained from Technosoft.

2.2 Product Features

- Fully digital servo drive suitable for the control of rotary or linear **brushless**, **DC brush**, and **step**[1] motors
- **Open or closed-loop** control of 2 and 3-phase steppers[1]
- Very compact design
- **Sinusoidal (FOC)** or **trapezoidal (Hall-based)** control of brushless motors
- **Technosoft Motion Language (TML)** instruction set for the definition and execution of motion sequences
- Standalone operation with stored motion sequences
- **Motor supply**: 7-48V; **Logic supply**: 6-48V;
- **STO**[2]: 2 safe torque-off inputs, safety integrity level (SIL3/Cat3/PLe) acc. to EN61800-5-1; -2/ EN61508-3; -4/ EN ISO 13849-1.
- **Output current:**
  - **Micro 4804 MZ / LZ and Micro 4803 MZ / LZ**:
    - **Nominal:** $4.5A_{RMS}$ / 6.3A amplitude for PMSM motors
      5.5A for DC / BLDC / Step motors
    - **Peak:** $11.3A_{RMS}$ / 16A amplitude
  - **Micro 4804 PZ / CZ**:
    - **Nominal:** $5.7A_{RMS}$ / 8A amplitude for PMSM motors
      7A for DC / BLDC / Step motors
    - **Peak:** $11.3A_{RMS}$ / 16A amplitude
- **Communication**:
  - USB;
  - RS-232;
  - For **CAN** executions: CAN-bus 2.0B up to 1Mbit/s (for CAN drives);
  - For **CAT** executions:
    - **MZ, PZ and LZ executions:** EtherCAT® connection to standard RJ45 requires external magnetics (may be integrated into RJ45)
    - **CZ execution:** Dual 100Mbps EtherCAT® interfaces, communication cycle time down to 10 kHz.
- **Thermal Protection**: The internal temperature sensor disables the PWM outputs if the measured temperature exceeds 105°C
- **Various modes of operation**, including:
  - Position profiles with trapezoidal or S-curve speed shape
  - Position, Velocity, Time (PVT) 3rd order interpolation

[1] Step motors are exclusively available for the Micro 4804.

[2] Available only for STO executions.

    - Position, Time (PT) 1st order interpolation
    - Electronic gearing and camming
    - 40 Homing modes
    - **CAN version:** torque, speed or position control; position or speed profiles, Cyclic Synchronous Position (CSP), Cyclic Synchronous Velocity (CSV) and Cyclic Synchronous Torque (CST) for CANopen mode; external reference mode (analogue or encoder feedback) or sent via a communication bus
    - **EtherCAT version:** position or speed profiles, Cyclic Synchronous Position (CSP), Cyclic Synchronous Velocity (CSV) and Cyclic Synchronous Torque (CST)
- **Digital and analog I/O's:**
    - **1 x analogue** input software selectable: 12-bit 0-5V or ±10V: Reference, Feedback or general purpose
    - **3 x digital inputs**: 2 for limit switches + one Enable[1], NPN, pull-to-GND to activate, pull-up on-board to +5V. Pull to GND to activate
    - **3 x configurabile I/O's**, each software selectable as:
        - Digital input, NPN, with pull-up on-board to +5V. Pull to GND to activate;
        - Digital output, NPN (open-collector), with pull-up on-board to +5V. Sink current: 1 x 1.5A to drive inductive loads (such as mechanical brake), 2 x 0.1A.
- **Feedback devices:** Single-loop support is available for the Micro LZ, while dual-loop support is offered for the Micro MZ, PZ and CZ.
    - **1 x Hall sensor interface** (digital or linear[3])
    - **Feedback#1 and Feedback#2[2] can be:**
        - **Incremental encoder A / B** (index Z only for Feedback #1): differential or single-ended;
        - **Absolute encoder[3]:** differential or single-ended encoder. Supported protocols: SSI, BiSS, EnDAT, TAMAGAWA, Panasonic, Nikon, Sanyo Denki
- **For CAN executions** - two CAN operation modes selectable by HW pin:
    - **CANopen** – conforming with **CiA 301 v4.2, CiA DSP 402 v3.0** and **CiA 305 v.2.2.13**
    - **TMLCAN** – intelligent drive conforming with Technosoft protocol for exchanging TML commands via CAN-bus
- **For CAT executions** - supported protocols:
    - **CoE** - CAN application protocol over EtherCAT - in conformance with CiA 402 device profile
    - **FoE** – File over EtherCAT – for setup/TML functions and firmware update
    - **EoE** – Ethernet over EtherCAT – for Easy Motion Studio communication over EtherCAT
- **16Kwords SRAM** memory per axis for data acquisition
- **24Kwords E^2ROM** per axis to store setup data, TML motion programs, cam tables and other user data
- Operating ambient temperature: 0-40°C (over 40°C with derating)
- **>98% voltage efficiency, >98% power efficiency**
- Feature that **detects breakage** of **Hall wires** and/or of **incremental/absolute encoder wires**
- **Protections :**
    - Short-circuit between motor phases
    - Short-circuit from motor phases to ground
    - Over-voltage
    - Under-voltage
    - Over-current
    - Over-temperature
    - Communication error
    - Control error

[1] The Enable functionality is avalabile only for the non-STO executions of Micro.

[2] The second feedback is not available for Micro LZ executions.

[3] Absolute encoders and Linear Halls are not supported by the Micro LZ executions.

2.3 Identification Labels

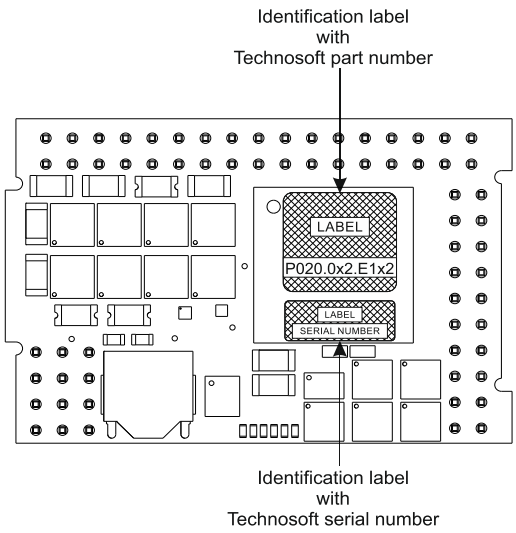

Figure 2-1 ***Micro MZ and LZ identification labels***

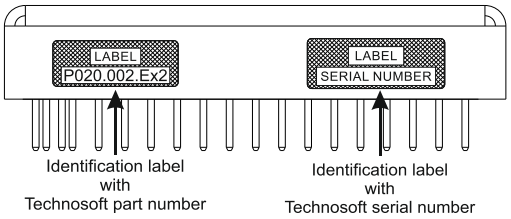

Figure 2-2 ***Micro 4804 PZ identification labels***

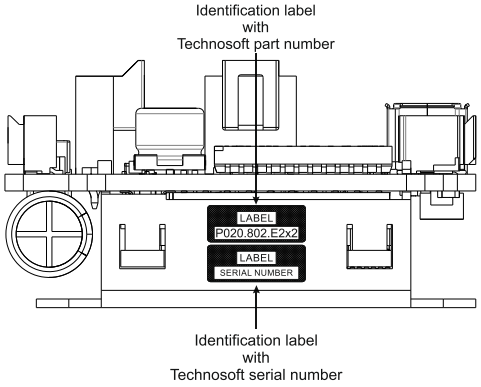

Figure 2-3 ***Micro 4804 CZ identification labels***

The **Micro 4804 c**an have the following part numbers and names on the identification label:

Product Name	Part Number
Micro 4804 MZ-CAT	P020.002.E122
Micro 4804 MZ-CAN	P020.002.E102
Micro 4803 MZ-CAT	P020.001.E122
Micro 4803 MZ-CAN	P020.001.E102
Micro 4804 PZ-CAT	P020.002.E322
Micro 4804 PZ-CAN	P020.002.E302
Micro 4804 CZ-CAT	P020.802.E222
Micro 4804 CZ-CAN	P020.802.E202
Micro 4804 LZ-CAT	P020.022.E122

Product Name	Part Number
Micro 4804 LZ-CAN	P020.022.E102
Micro 4803 LZ-CAT	P020.012.E122
Micro 4803 LZ-CAN	P020.012.E102
Micro 4804 MZ-CAT-STO	P020.003.E122
Micro 4804 MZ-CAN-STO	P020.003.E102
Micro 4804 PZ-CAT-STO	P020.003.E322
Micro 4804 PZ-CAN-STO	P020.003.E302
Micro 4804 CZ-CAT-STO	P020.803.E222
Micro 4804 CZ-CAN-STO	P020.803.E202

2.4 Supported Motor-Sensor Configurations

2.4.1 Single loop configurations

The position and/or speed are controlled using one feedback sensor. The other available feedback sensor input can be used for External reference Position or Velocity, Pulse and Direction, Electronic Gearing or Camming.

Motor sensors				Motor types				
Encoder[1]	Digital Halls	Linear Halls	Tacho	Brushless PMSM[2]	Brushless BLDC[3]	Brushed DC Voice coils	Stepper 2 phase[8]	Stepper 3 phase[8]
Incremental encoder[4] / SSI / EnDAT2.2 / BiSS-C / Tamagawa / Panasonic / Nikon / Sanyo Denki[5],[6]				✓		✓	✓	
Incremental encoder[4] / SSI / EnDAT2.2 / BiSS-C / Tamagawa / Panasonic / Nikon / Sanyo Denki[5,6]	✓			✓	✓			
None	✓			✓				
None		✓		✓				
None			✓			✓		
None							✓	✓

2.4.2 Dual loop configurations[7]

The motor speed control loop is closed on one feedback connected on the motor while the motor position control loop is closed on the other available feedback which is placed on the load. There is usually a transmission between the load and the motor.

Motor sensor				Motor types					Load sensors
Encoder[1]	Digital Halls	Linear Halls	Tacho	Brushless PMSM[2]	Brushless BLDC[3]	Brushed DC Voice coils	Stepper 2 phase[8]	Stepper 3 phase[8]	Encoder[9]
Incremental encoder[4] / SSI / EnDAT2.2 / BiSS-C / Tamagawa / Panasonic / Nikon / Sanyo Denki[5]				✓		✓	✓		Incremental encoder[4]/ SSI / EnDAT2.2 / BiSS-C / Tamagawa / Panasonic / Nikon / Sanyo Denki
Incremental encoder[4] / SSI / EnDAT2.2 / BiSS-C / Tamagawa / Panasonic / Nikon / Sanyo Denki[5]	✓			✓	✓				Incremental encoder[4]/ SSI / EnDAT2.2 / BiSS-C / Tamagawa / Panasonic / Nikon / Sanyo Denki
None	✓			✓					Incremental encoder[4] / SSI / EnDAT2.2 / BiSS-C / Tamagawa / Panasonic / Nikon / Sanyo Denki[10]
None		✓		✓					Incremental encoder[4] / SSI / EnDAT2.2 / BiSS-C / Tamagawa / Panasonic / Nikon / Sanyo Denki[11]
None			✓			✓			Incremental encoder[4] / SSI / EnDAT2.2 / BiSS-C / Tamagawa / Panasonic / Nikon / Sanyo Denki
None							✓	✓	None

Each defined motor type can have any combination of the supported feedbacks either on motor or on load.

Example: PMSM motor with Incremental encoder (from feedback #1) on motor and Incremental encoder (from feedback#2) on load

[1] Motor encoder can be either on Feedback 1 or on Feedback 2
[2] Sinusoidal. Brushless motor is controlled as PMSM using a field oriented control algorithm
[3] Trapezoidal. Brushless motor is controlled as a BLDC motor using Hall-based commutation.
[4] Single-ended or differential.
[5] SSI / EnDAT2.2 / BiSS-C / Tamagawa / Panasonic / Nikon / Sanyo Denki are differential, but single-ended option is also accepted
[6] Absolute encoders (SSI / EnDAT2.2 / BiSS-C / Tamagawa / Panasonic / Nikon / Sanyo Denki) are not supported by the Micro LZ executions.
[7] Feedback 2 is not available for the Micro LZ, therefore dual-loop configurations are not supported.
[8] Not supported by Micro 4803 executions.
[9] Load encoder is on Feedback 2 / 1, if motor encoder is on Feedback 1 / 2
[10] Load encoder can be only on Feedback 1
[11] Load encoder can be only on Feedback 2

3 Hardware Installation

3.1 Micro MZ Dimensions

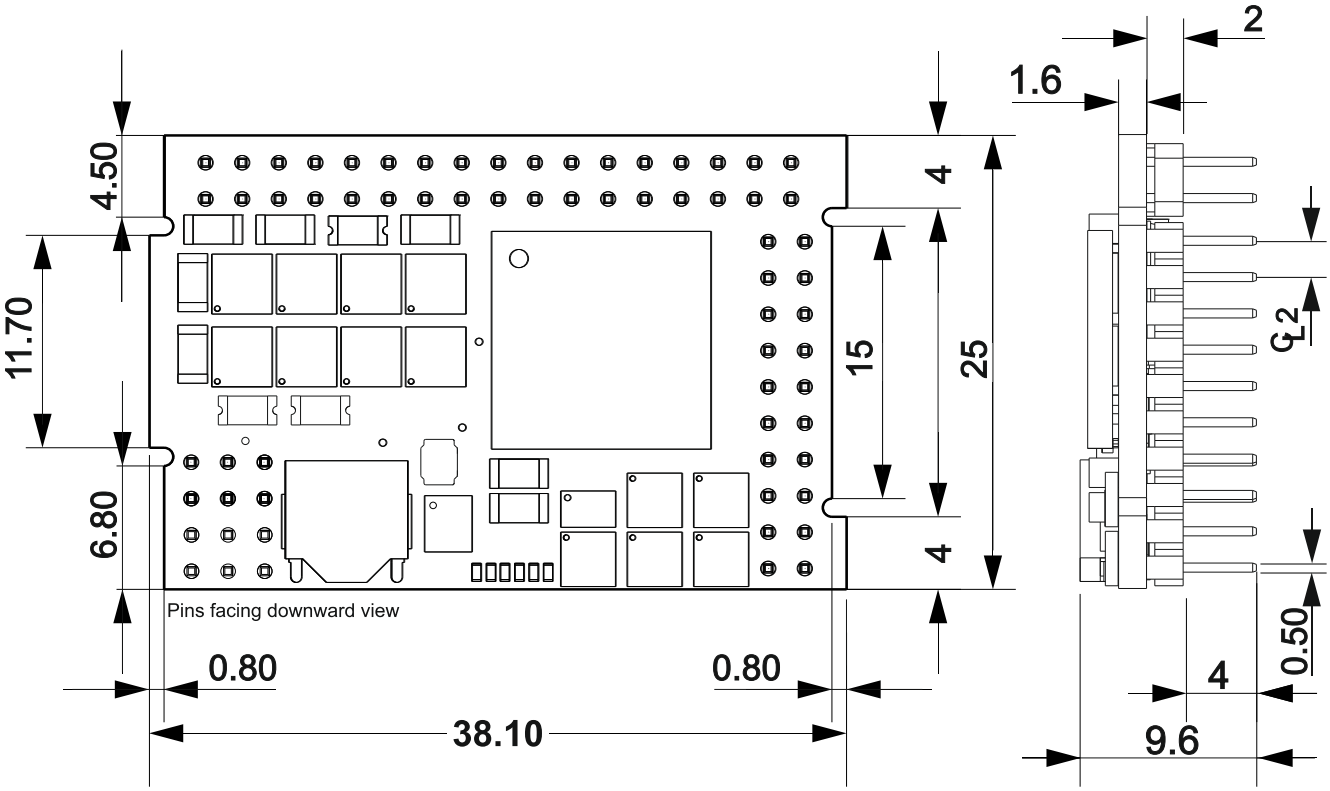

Figure 3-1 **Micro 4804 MZ-CAN, Micro 4804 MZ-CAT, Micro 4803 MZ-CAN and Micro 4803 MZ-CAT dimensions**

3.2 Micro 4804 MZ-STO Dimensions

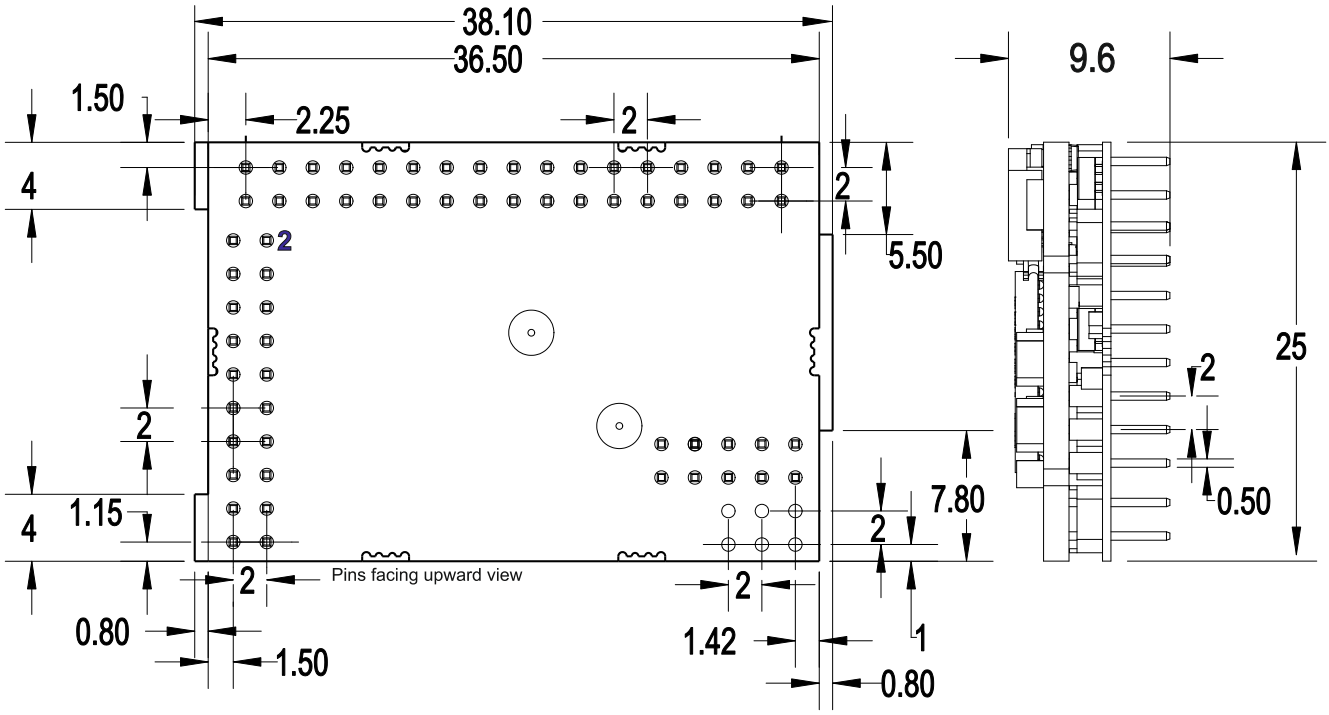

Figure 3-2 **Micro 4804 MZ-CAN-STO and Micro 4804 MZ-CAT-STO dimensions**

3.3 Micro LZ Dimensions

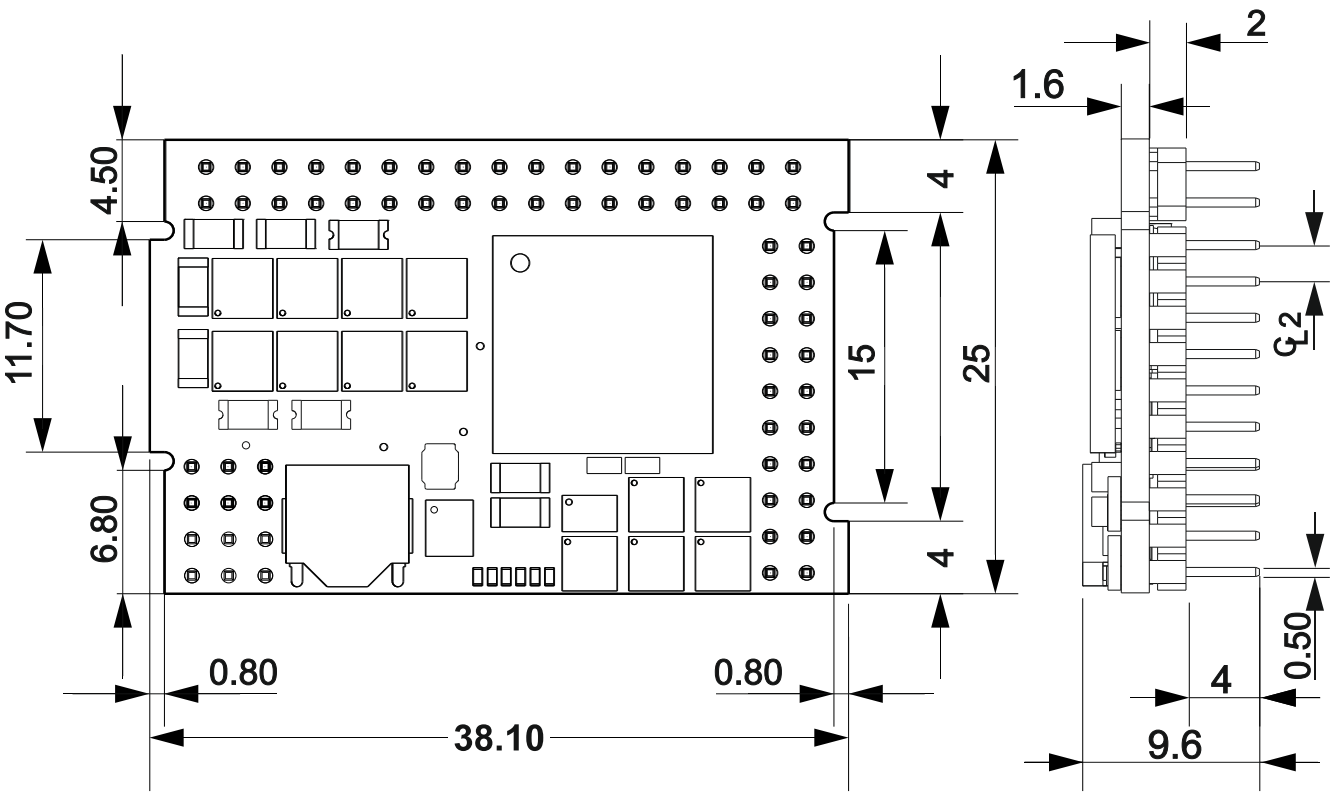

Figure 3-3 **Micro 4804 LZ-CAN, Micro 4804 LZ-CAT, Micro 4803 LZ-CAN and Micro 4803 LZ-CAT dimensions**

3.4 Micro 4804 PZ Dimensions

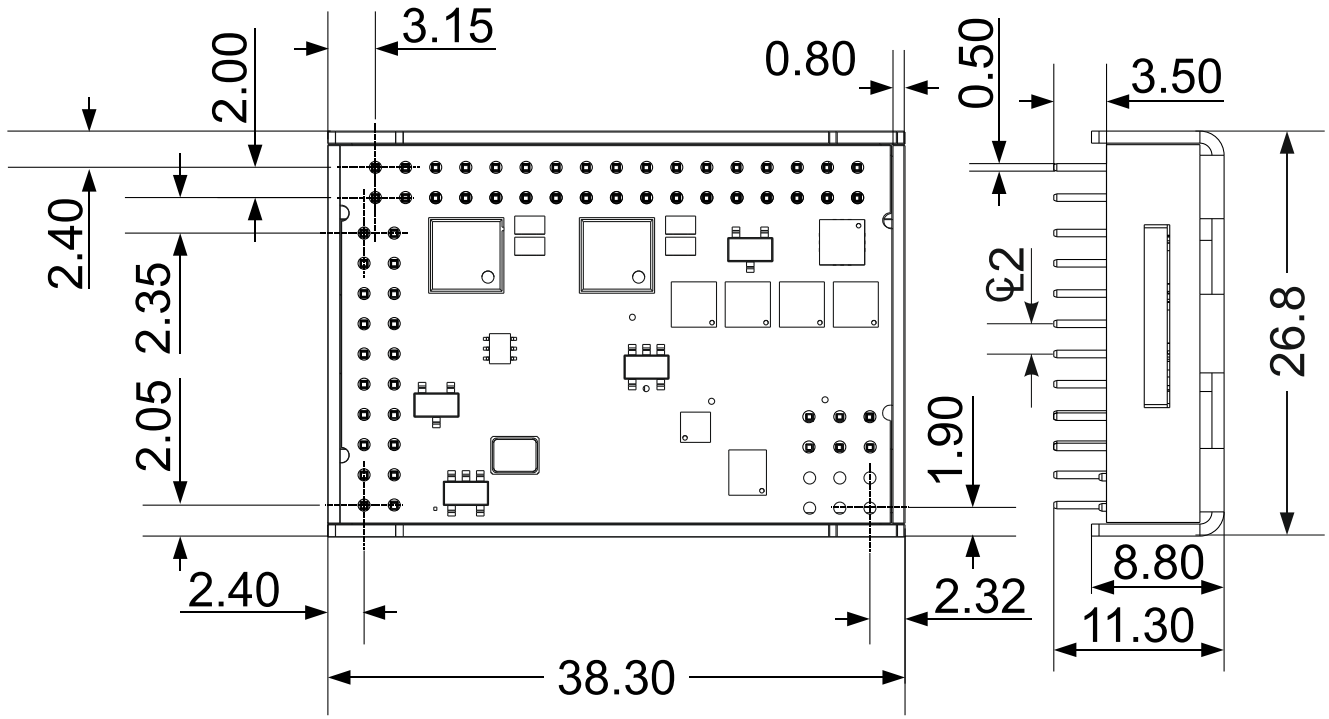

Figure 3-4 **Micro 4804 PZ-CAN and Micro 4804 PZ-CAT dimensions**

3.5 Micro 4804 PZ-STO Dimensions

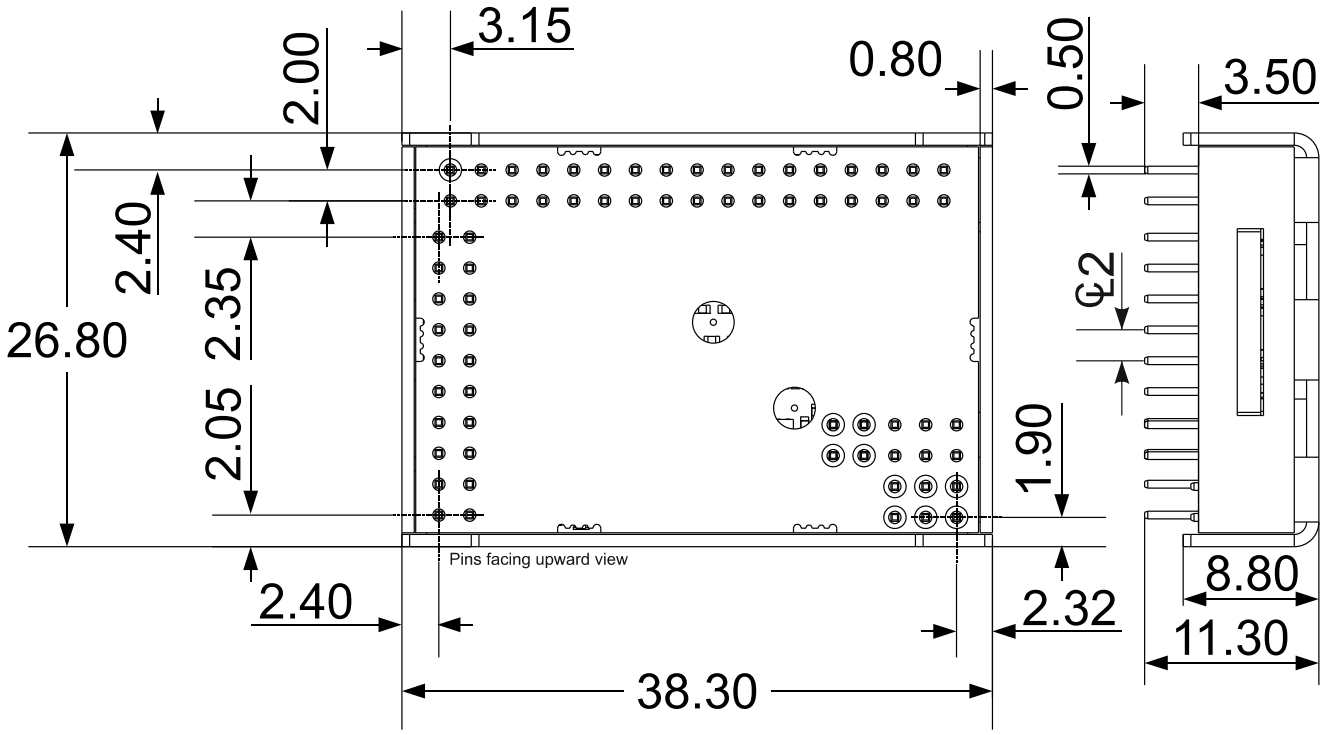

Figure 3-5 **Micro 4804 PZ-CAN-STO and Micro 4804 PZ-CAT-STO dimensions**

3.6 Micro 4804 CZ-CAN and CZ-CAN-STO Dimensions

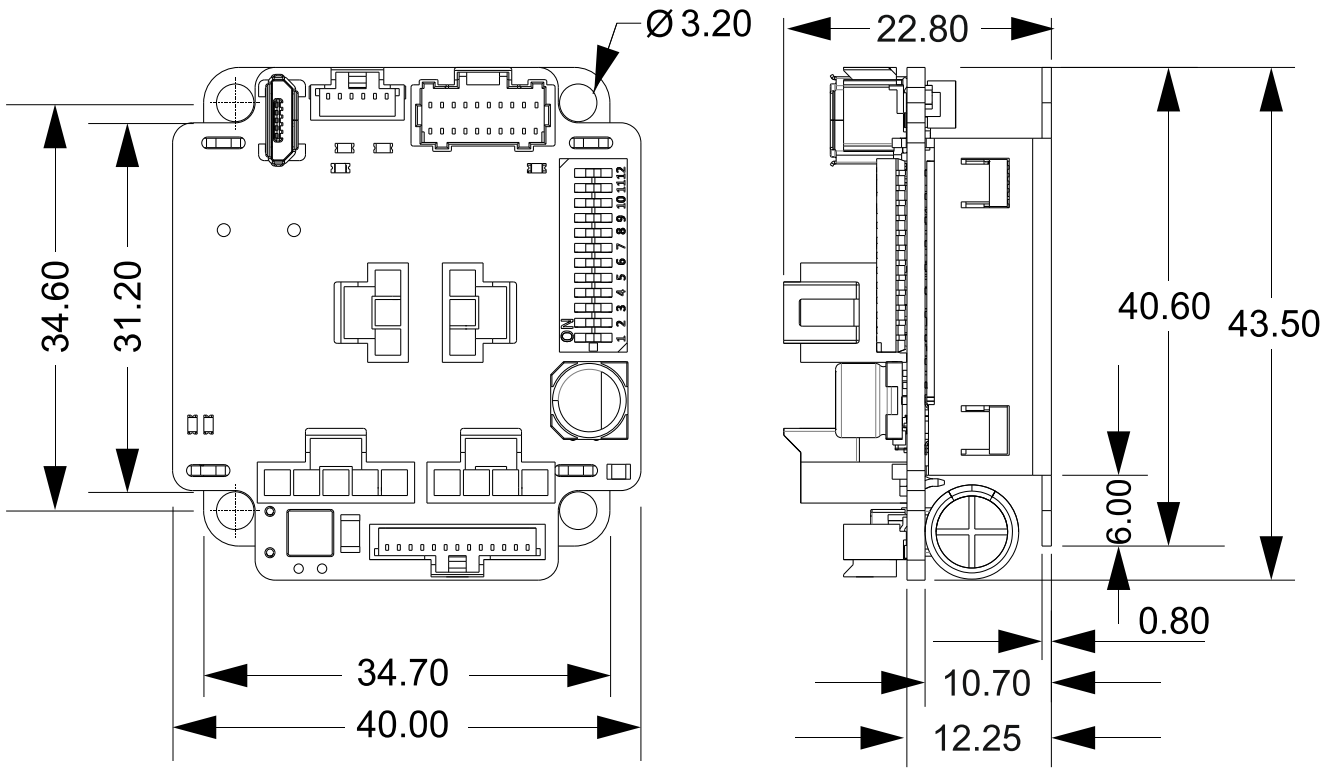

Figure 3-6 **Micro 4804 CZ-CAN and CZ-CAN-STO dimensions**

3.7 Micro 4804 CZ-CAT and CZ-CAT-STO Dimensions

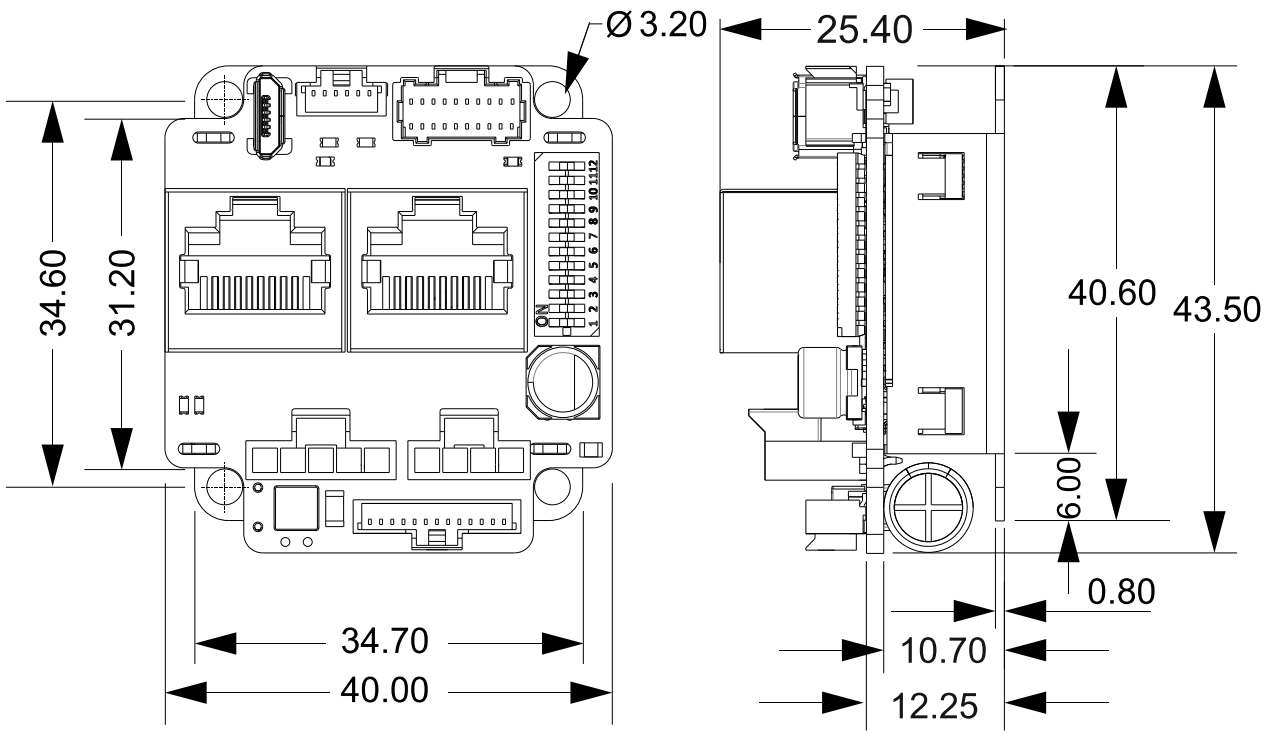

Figure 3-7 ***Micro 4804 CZ-CAT and CZ-CAT-STO dimensions***

3.8 Mechanical Mounting

The ***Micro MZ / PZ / LZ*** is intended to be mounted horizontally on a motherboard equipped with the recommended mating connectors, as specified in chapter *3.3.2.1*. Motherboard PCB Design. Several drives can be hosted by a single motherboard.

The ***Micro 4804 CZ*** is intended to be mounted vertically or horizontally on a metallic support using the provided mounting holes and the recommended mating connectors.

The recommended inserts and screws for ***Micro 4804 CZ*** are:

Image	Connector	Description	Manufacturer	Part Number
	-	Self-clinching nuts M3	PennEngineering® (PEM®)	KF2-M3-ET
	-	Screws M3x10	Bossard	BN610-M3x10

For thermal calculations: the **Micro** can be assumed to generate 1 Watt (=3.4 BTU/hour) at idle, and up to 2.4 Watt (=8.2 BTU/hour) worst case while driving a motor.

3.8.1 Recommended spacing for Micro MZ/PZ/LZ

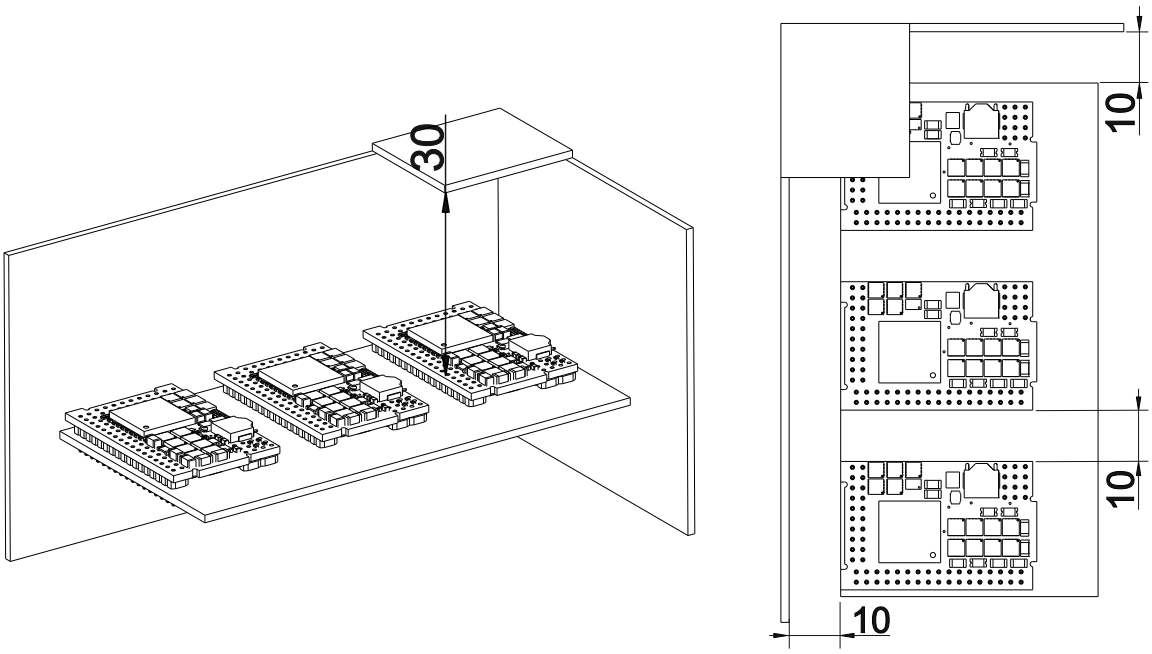

Figure 3-8 ***Recommended spacing - horizontal mounting, worst case: non-metallic, closed box (All dimension are expressed in mm)***

The figures above shows the minimum spacing to assure proper airflow by natural convection. If closed completely in a box, ventilation openings shall be foreseen on the top and bottom sides. If ventilation driven by natural convection is not enough to maintain the temperature surrounding the drives, then alternate forced cooling methods must be applied.

Remark: *In case of using a metallic box, with ventilation openings, all spacing values may be reduced substantially. With proper ventilation, keeping the air surrounding the drive inside the limits indicated, the spacing values may be reduced down to zero.*

3.8.2 PCB Design

For Micro MZ and LZ motherboard PCB design, please refer to the following dimensional drawing:

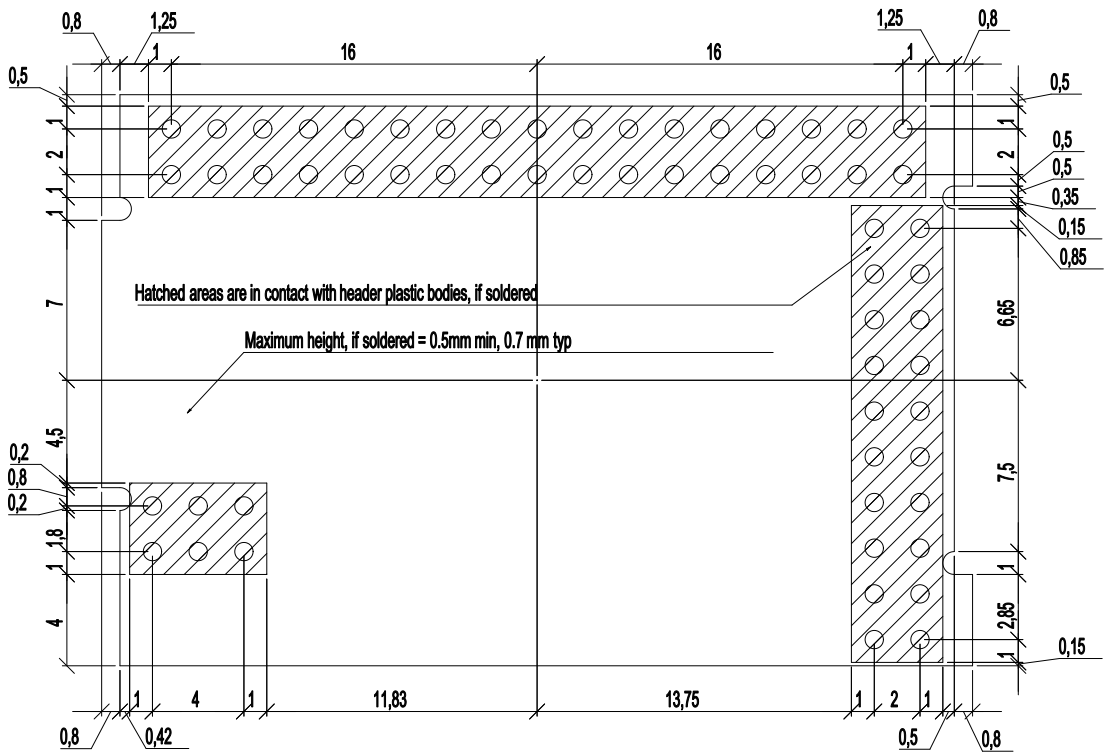

Figure 3-9 **Micro MZ and LZ PCB Footprint – Pins facing downward view**

For Micro 4804 MZ-STO motherboard PCB design, please refer to the following dimensional drawing:

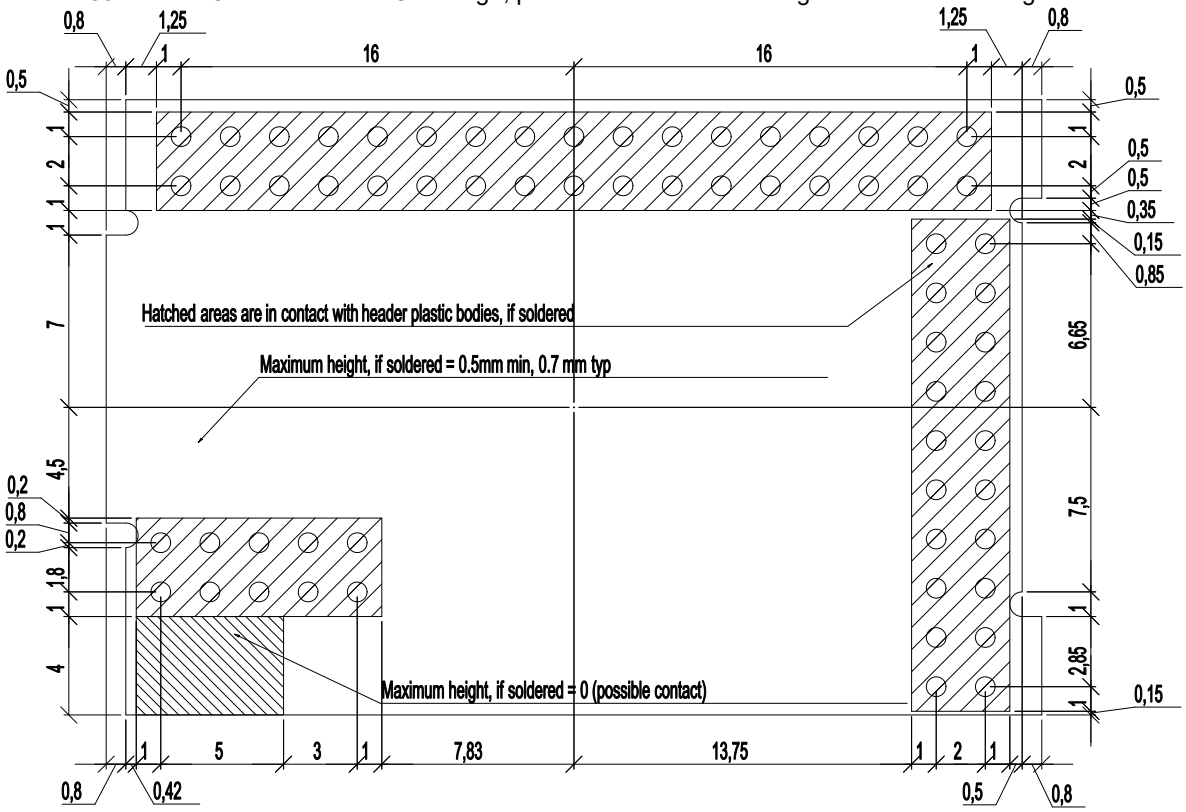

Figure 3-10 **Micro 4804 MZ-STO PCB Footprint – Pins facing downward view**

For the Micro 4804 PZ motherboard PCB design, please refer to the following dimensional drawing:

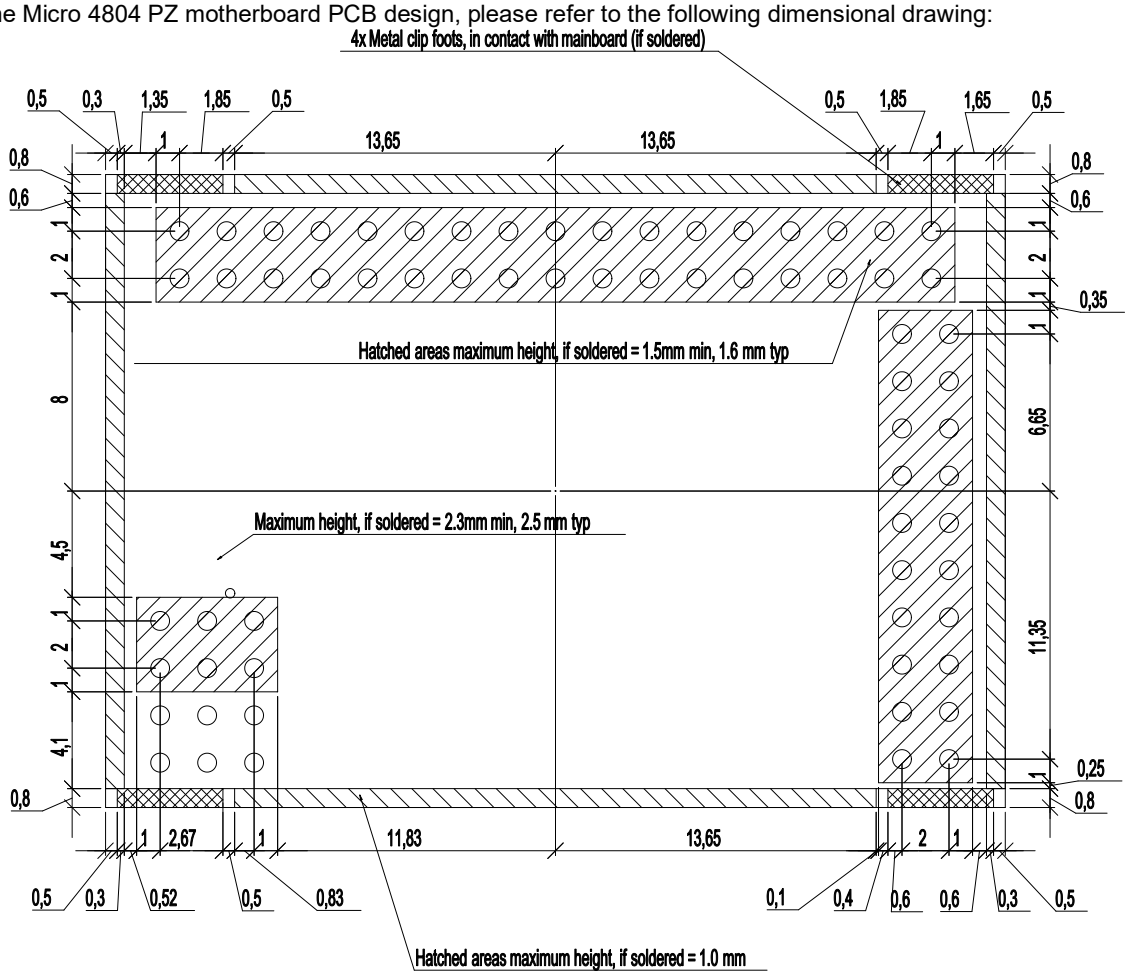

Figure 3-11 **Micro 4804 PZ PCB Footprint – Pins facing upward view**

For the Micro 4804 PZ-STO motherboard PCB design, please refer to the following dimensional drawing:

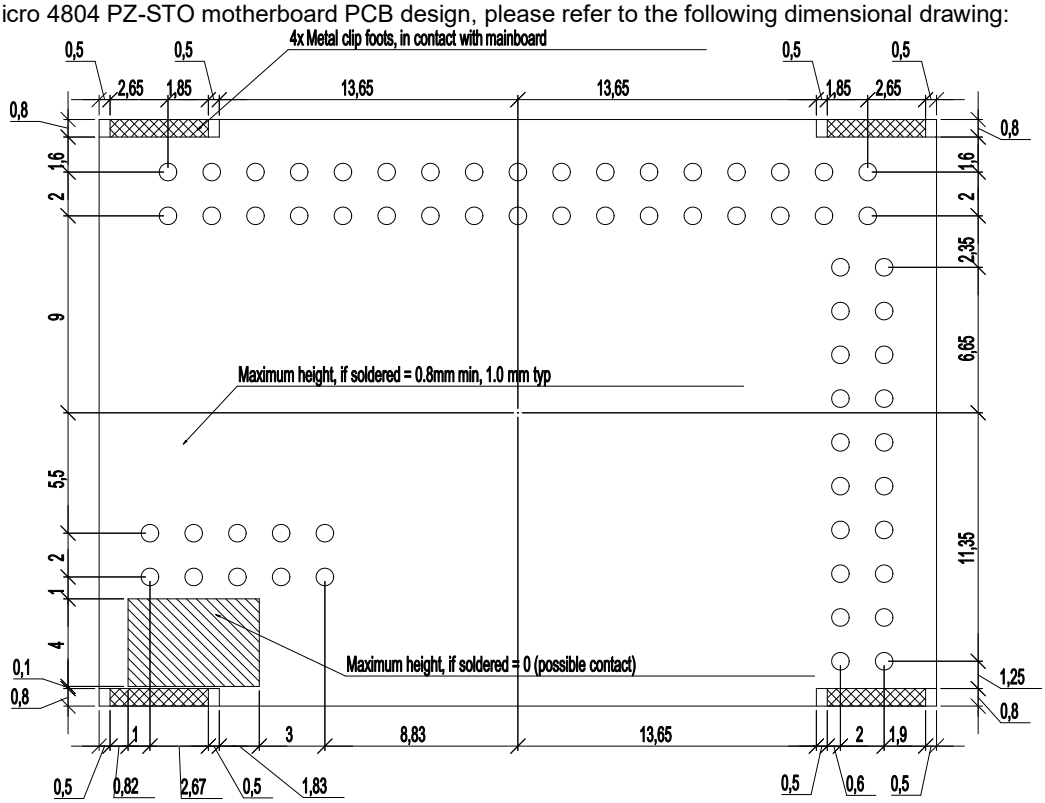

Figure 3-12 **Micro 4804 PZ-STO PCB Footprint – Pins facing upward view**

3.8.2.1 Motherboard PCB Design

It is recommended to use a multi-layer PCB for the motherboard to provide sufficient space for routing all the pins of the Micro MZ/PZ/LZ drives. While a 2-layer PCB can be used, this may require leaving some pins unconnected.

The Micro MZ/PZ/LZ drives are designed to be mounted on a mainboard. The preferred method for electrical connection is to use sockets on the mainboard; however, direct soldering of the module into the mainboard is also an option.

3.8.2.2 Recommendations for the PCB Design

Below is a list of recommendations for the PCB design of the motherboard:

- Motor supply and motor outputs: use islands / areas of copper to escape connector area; this will maximize current capability. When using simple tracks, use at least 100mil cross section (75mil track width for 1oz/ft^2 copper thickness) – for Micro MZ/PZ/LZ drives.
- Motor supply and ground return tracks between Micro MZ/PZ/LZ drive and the nearby V_{MOT} decoupling capacitor are to be considered as EMI sources, and kept to a minimum length.
- Place the decoupling capacitors on V_{MOT} and V_{LOG} (see also 3.10 Power Supply Connection) as close as physically possible to the drive, to minimize EM radiated emissions. For un-shielded applications (no metallic box) and typical EMC regulations, the spacing between drive and capacitors must be less than 3 centimeters.
- In multi-axis applications (multiple Micro MZ/PZ/LZ drives on the same motherboard), it is preferable to have a separate decoupling capacitor for each drive's V_{MOT}. For V_{LOG} it is acceptable to share one decoupling capacitor for two drives.
- For stringent EMI requirements, it may be necessary to add common-mode filtering on the motor and/or logic supply inputs. Be sure to use 3-phase EMC filters, not 2-phase filters, in order to fulfill the basic requirement of zero common-mode current through the filter. This is necessary because the ground negative return is shared between V_{MOT} and V_{LOG}.
- Motor outputs shall be routed with parallel traces, and minimizing the loop area between these tracks. Avoid placing components above or below the motor output tracks, as these components may become effective antennas radiating EMI. If possible, route all 3 motor outputs in strip-line configuration (above or below a ground plane).

- For stringent EMI requirements, it may be necessary to add common-mode inductors on the motor outputs. Place these filters near the Micro MZ/PZ/LZ drive, not near the external connector, to reduce radiation from the PCB tracks.
- Motor outputs must be separated from any nearby track (on the same layer) by a guard ring / track / area connected to ground. It is recommended to use the same guarding precaution also for tracks on nearby layers, i.e. use intermediate guard layer(s) connected to ground. The motor outputs must be treated as first source of noise on the motherboard. Second source of noise is the current flow between each drive and it's decoupling V_{MOT} capacitor.
- For best EMC performance, it is strongly recommended to provide an un-interrupted ground plane on one of the inner layers.
- All GND pins of the Micro MZ/PZ/LZ drive are galvanically connected together on-board. If the motherboard provides an uninterrupted ground plane, it is recommended to connect all GND pins to the ground plane, and use the ground plane to distribute GND wherever needed. If the motherboard does not provide an uninterrupted ground plane, it is best to use each GND pin for its intended purpose. This will create local "star point" ground connection on-board each drive.
- Above paragraph is NOT applicable to J1 pins 15, 16 for the EtherCAT versions of MZ/PZ/LZ drive. For these drives, pins 15, 16 of J1 must be kept isolated from the global ground plane. Details are given in the EtherCAT wiring indication chapter 3.8.2.3.2. For CAN versions, connect these two pins to the global ground plane, like any other GND pins.
- For a multi-axis motherboard with one common power supply for all motors, each motor power supply return track shall be routed separately for each Micro MZ/PZ/LZ drive, and star-point connected at the power supply terminal.
- The following signal pairs must be routed differentially, i.e. using parallel tracks with minimal loop area: A1+/DAT1+, A1-/DAT1- ; B1+/CLK1+, B1-/CLK1- ; Z1+, Z1- ; A2+/DAT2+, A2-/DAT2- ; B2+/CLK2+, B2 /CLK2-; CAN-Hi, CAN-Lo.
- When using $+5V_{OUT}$ as supply for external devices (like encoders, Hall sensors, etc.) provide extra filtering and protection: use series resettable (PTC) fuses to add short-circuit protection; use transient absorbers to protect against ESD and over-voltage; add high-frequency filtering to protect against external noise injected on $+5V_{OUT}$.
- The outer box / case / cabinet must be connected to the motherboard ground either galvanically (directly) or through high-frequency decoupling capacitors, rated at an appropriate voltage.
- For PZ and CZ versions, the outer metallic shell of the drive is weakly connected to GND, but electrical contact cannot be guaranteed, so do not use this metallic shell for any electrical purpose. Its purpose is only for thermal dissipation, EMC shielding, ESD protection and mechanical/environmental protection.

3.8.2.3 EtherCAT signals PCB routing indications

3.8.2.3.1 PCB electrical Wiring calculations

$$Z_{DIFF}^{Microstrip} = \frac{174}{sqrt(1.41 + E_r)}\left(1 - 0.48e\left(-0.96\frac{S}{H}\right)\right)\ln\left(\frac{5.98H}{0.8W + T}\right)$$

W = Width of the trace
H = Height of dielectric above the return plane
T = Trace thickness
S = Space between traces
E_r = Relative permittivity of the dielectric

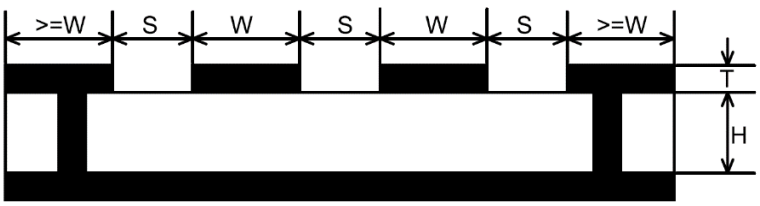

Figure 3-13 **Microstrip Differential Impedance**

For example:

$$\begin{cases} T = 17.5\ microns \\ H = 175\ microns \\ E_r = 4.8(FR4) \quad \rightarrow Z_{DIFF} = 100.6\ \Omega \\ W = 8mil \\ S = 7\ mil \end{cases}$$

$$Z_{DIFF}^{Stripline} = \frac{200}{sqrt(E_r)}\left(1 - 0.347e\left(-2.9\frac{S}{H}\right)\right)\ln\left(\frac{1.9(2H+T)}{0.8W+T}\right)$$

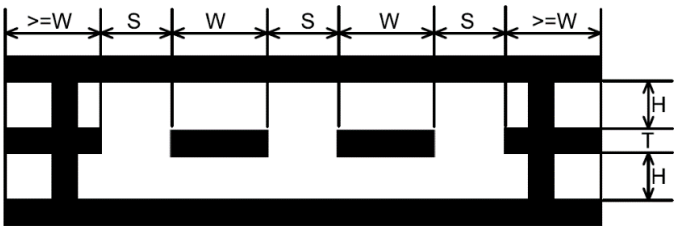

Figure 3-14 **Stripline Differential Impedance**

For example:

$$\begin{cases} T = 17.5\ microns \\ H = 175\ microns \\ E_r = 4.8(FR4) \quad \rightarrow Z_{DIFF} = 100.2\ \Omega \\ W = 4mil \\ S = 4\ mil \end{cases}$$

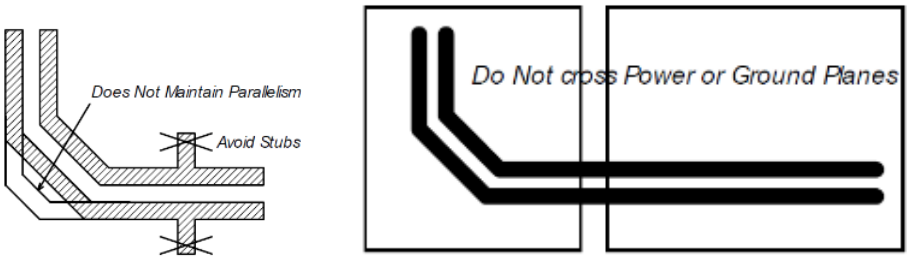

Figure 3-15 **Stripline Differential Impedance**

3.8.2.3.2 PCB EtherCAT routing indications applicable to Micro MZ/PZ/LZ version

- High-speed signals (Tx/Rx 0/1 +/-) must be routed as differential pairs, with controlled impedance, microstrip or stripline with 100 ohm differential characteristic impedance.
- Microstrip and stripline pairs shall be guarded on the same layer as the differential pair, with outer traces connected to the return plane by vias. The guarding traces shall form preferably a closed ring, wherever possible.
- Use above formulae (or other method) to calculate microstrip or stripline differential impedance
- Avoid stubs, crossovers and vias on high-speed signals. Vias present impedance discontinuities and should be avoided. Route an entire differential pair trace on a single layer if possible.
- High-speed signals should not be run such that they cross a plane split. A signal crossing a plane split may cause unpredictable return path currents and would likely impact signal quality, also potentially creating EMI problems.
- The center tap of the magnetics non-isolated winding (connected to drive) shall be connected to J1 dedicated GND pins 15 and 16. Avoid using these two pins for other purposes, such as connecting them to the system-wide ground plane, because this may create unwanted voltage drops affecting quality of EtherCAT signals. For example, do not use these two pins to carry motor supply current, which contains harmful harmonics in the frequency range of EtherCAT signals. Practically, keep these two connections isolated from system GND.
- Return plane(s) for differential signals shall be connected to J1 dedicated GND pins 15 and 16. If possible, keep these local return plane(s) isolated from each other, and mandatorily keep them isolated from system-wide GND plane. Maintaining isolation between port 0 and port 1 local return planes is optimal for noise rejection. If this is not possible due to routing constraints, then strap the pins near the drive, but always keep this local return plane(s) separate from GND plane, to avoid circulating currents from power supply(ies).
- The center tap of the magnetics isolated winding has a "Bob Smith" termination to system ground. "Bob Smith" termination is used to reduce noise resulting from common-mode current flows, as well as reduce susceptibility to any noise from unused wire pairs on the RJ45.
- "Bob Smith" termination is different depending on Power Over Ethernet (PoE) compliance. PoE carries up to 57V between pairs, which would destroy the 75ohm terminating resistors if DC blocking capacitors of 10nF are not in place.
- Capacitor 1nF 2KV must sustain 1.5KVrms for 1 minute as per IEEE802.3. The 1Meg discharge resistor may be destroyed during this hi-pot testing.

- For enhanced EMC immunity it is possible to add surge protectors on the high-speed signals, on the isolated side of the magnetics (not across pins, there is DC current flowing through windings). Check that signals are not affected by the added parasitic capacitance.
- Use magnetics with integrated common-mode choking devices. Use magnetics compatible with Auto MDI/MDI-X (with symmetrical windings). Use metal shielded connectors, and connect the shield to device chassis / PE.
- Do not run any signals under the magnetics - this could cause unwanted noise crosstalk. Likewise void the planes under magnetics, this will help prevent common-mode noise coupling.
- To save board space and reduce component count, RJ45 connectors with integrated magnetics may be used. Check the PoE compliance where applicable.
- It is recommended to use magnetics in between two drives mounted on the same mainboard PCB, as shown in *Figure 3-17* **EtherCAT wiring for connection between Micro MZ/PZ/LZ drives**.
- It is NOT recommended to directly connect two modules on the same PCB via EtherCAT over a very short distance without using magnetics. This method is NOT recommended because it is very sensitive to the design quality of the mainboard, specifically to the voltage difference between drives' ground potential (ground bounce), which can lead to packet loss when PCB design is not done correctly. So, we do NOT encourage this approach. But technically this is feasible. Direct (galvanic) connection, without any extra components, between Rx and Tx, will work (the Micro 4804 has on-board DC blocking capacitors series with all EtherCAT signals). For an error-free direct-connection, follow the following PCB design rules:
    - Make sure you use one (or preferably more) GND plane(s) on the mainboard, to minimize ground voltage difference between boards.
    - Make sure you use isolated local return plane(s) to implement stripline or microstrip, controlled-impedance, differential routing of the high-speed Ethernet signals.
    - Do not use the local return plane(s), which implements stripline / microstrip, to carry current, for example as ground return for V_{MOT}.
- A possible method is to connect the local return plane(s) using capacitors of 10nF...22nF, connected at both ends (drives) of the local return plane(s). This will break the unwanted current paths, while keeping the high-frequency return path.

3.8.2.3.3 EtherCAT Bus connection

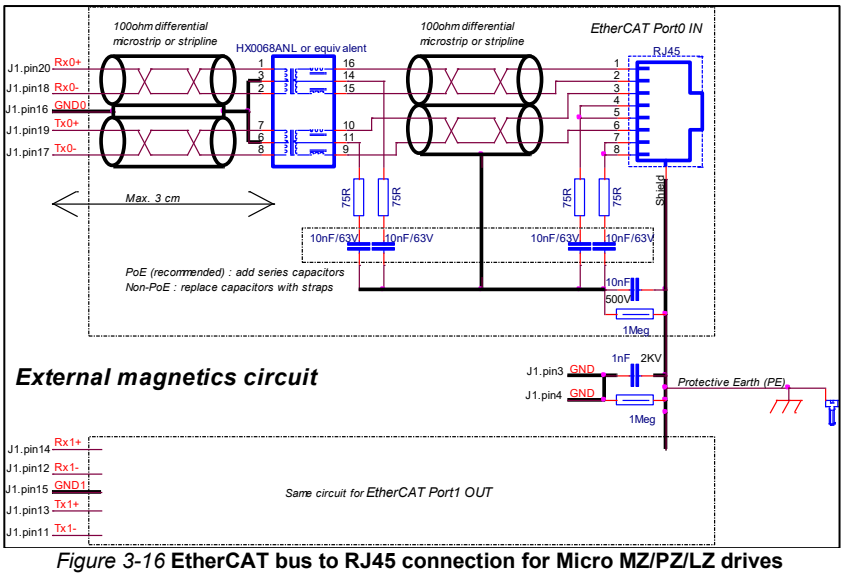

Figure 3-16 **EtherCAT bus to RJ45 connection for Micro MZ/PZ/LZ drives**

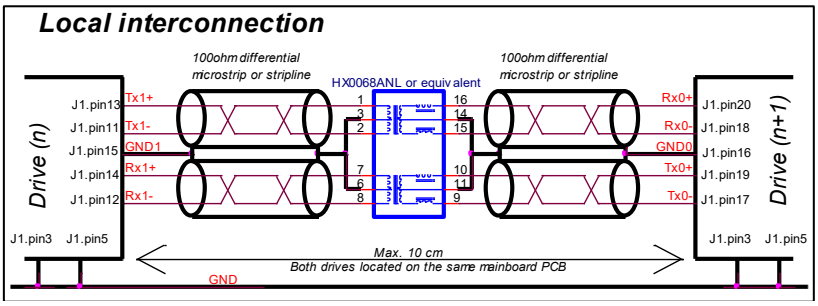

Figure 3-17 **EtherCAT wiring for connection between Micro MZ/PZ/LZ drives**

For additional details regarding signal swapping, please check the EtherCAT signals schematic considerations chapter

3.9 Connectors and Pinouts

3.9.1 Pinouts for Micro 4804 MZ-CAN

Micro 4804 MZ-CAN

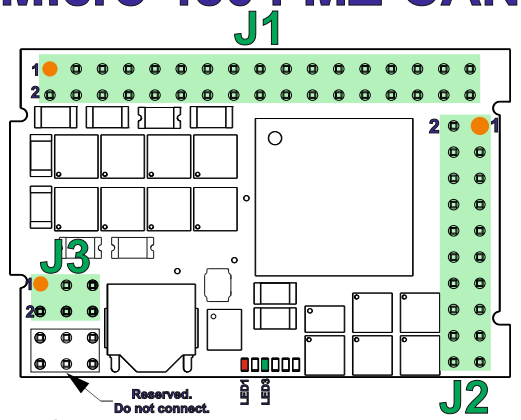

Pins facing downwards view

J1

Pin	Name	Type	Description
1	+Vlog	I	Positive terminal of the logic supply input: 6 to 48 V_{DC}
2	A/A+	O	Phase A for 3-ph motors, A+ for 2-ph steppers, Motor+ for DC brush motors
3	GND	-	Ground return for logic supply
4	B/A-	O	Phase B for 3-ph motors, A- for 2-ph steppers, Motor- for DC brush motors
5	GND	-	Ground return for motor supply & shield for motor windings cable
6	C/B+	O	Phase C for 3-ph motors, B+ for 2-ph steppers
7	+Vmot	I	Positive terminal of the motor supply: 7 to 48 VDC
8	Cr/B-	O	Chopping resistor / Phase B- for 2-ph steppers
9	BFS	I	Boot Fail-Safe: Connect to GND to reprogram firmware in the improbable case when a power loss occurs during a firmware update and the normal firmware recovery fails
10	ID2	I	AxisID2 selection pin. See AxisID register settings table.
11 … 14	Rsvd.	-	Reserved. Do not connect.
15	GND	-	Ground return and shield
16	GND	-	Ground return and shield
17 … 20	Rsvd.	-	Reserved. Do not connect.
21	ID0	I	AxisID0 selection pin. See AxisID register settings table.
22	ID1	I	AxisID1 selection pin. See AxisID register settings table.
23	232TX	O	RS-232 Data Transmission.
24	232RX	I	RS-232 Data Reception.
25	CAN Hi	O	CAN-Bus positive line (dominant high)
26	CAN Lo	I	CAN-Bus negative line (dominant low)
27	IN2/LSP	I	5-48V digital NPN input. Positive limit switch input
28	IN3/LSN	I	5-48V digital NPN input. Negative limit switch input
29	IN5/Enable	I	5-48V digital NPN input. Drive Enable input
30	I/O0	I/O	5-48V 1.5A NPN (sink) general-purpose digital programmable input IN0 or output OUT0
31	I/O1	I/O	5-48V 0.1A NPN (sink) general-purpose digital programmable input IN1 or output OUT1
32	I/O4	I/O	5-48V 0.1A NPN (sink) general-purpose digital programmable input IN4 or output OUT4
33	GND	-	Ground return and shield
34	AnalogIn	I	Analog input (range software selectable 0-5V or ±10V)

LEDs

No.	Name	Color	Description
LED1	TML ERR	RED	Turned on when the drive detects an error condition.
LED3	TML RDY	GREEN	Lit after power-on when the drive initialization ends. Turned off when an error occurs.

J2

Pin	Name	Type	Description
1	+V USB	I	USB 5V detect input
2	GND	-	Ground return for USB
3	Hall1	I	Digital Hall, or Linear Hall sensor 1
4	Hall2	I	Digital Hall, or Linear Hall sensor 2
5	Hall3	I	Digital Hall, or Linear Hall sensor 3
6	GND	-	Ground return and shield
7	+5V	O	Supply for all feedback sensors
8	GND	-	Ground return and shield
9	EncA1+/EncA1/ Dt1+/Dt1	I	Encoder 1 A+/Data+ diff. input or single-ended input
10	EncA1-/Dt1-	I	Encoder 1 A-/Data- diff. input. Leave open for single-ended; Add externally 120Ω to pin 9 for differential
11	EncB1+/EncB1/ Clk1+/Clk1	I	Encoder 1 B+/Clock+ diff. input or single-ended input
12	EncB1/ Clk1-	I	Encoder 1 B-/Clock- diff. input. Leave open for single-ended; Add externally 120Ω to pin 11 for differential
13	EncA2+/EncA2/ Dt2+/Dt2	I	Encoder 2 A+/Data+ diff. input or single-ended input
14	EncA2-/Dt2-	I	Encoder 2 A-/Data- diff. input. Leave open for single-ended; Add externally 120Ω to pin 13 for differential
15	EncB2+/EncB2/ Clk2+/Clk2	I/O	Encoder 2 B+/Clock+ diff. input or single-ended input
16	EncB2-/ Clk2-	I	Encoder 2 B-/Clock- diff. input. Leave open for single-ended; Add externally 120Ω to pin 15 for differential
17	Z1+	I	Encoder 1 Z+ diff. input or single-ended input
18	Z1-	I	Encoder 1 Z- diff. input. Leave open for single-ended; Add externally 120Ω to pin 17 for differential
19	USB DM	I/O	USB data-
20	USB DP	I/O	USB data+

J3

Pin	Name	Type	Description
1, 2	Rsvd.	-	Reserved. Do not connect.
3	TML RDY	O	Lit after power-on when the drive initialization ends. Turned off when an error occurs. Active high, LV-TTL.
4	TML ERR	O	Turned on when the drive detects an error condition. Active high, LV-TTL.
5, 6	Rsvd.	-	Reserved. Do not connect.

AxisID selection

AxisID register

MSB								LSB
Bit 8	Bit 7	Bit 6	Bit 5	Bit 4	Bit 3	Bit 2	Bit 1	Bit 0
ID2			ID1			ID0		

Nominal[V]	Minimum[V]	Maximum[V]	IDx* Bits	IDx* Value
0.000	0.00	0.53	000	0
1.06	0.53	1.41	001	1
1.76	1.41	2.01	010	2
2.25	2.01	2.43	011	3
2.60	2.43	2.75	100	4
2.89	2.75	3.01	101	5
3.13	3.01	3.22	110	6
3.32	3.22	3.30	111	7

Remarks:

1. *If Bit 7 (ID2) = 1 -> TMLCAN mode is selected*
2. *If Bit 7 (ID2) = 0 -> CANopen mode is selected*
3. *Bit 8 (MSB of ID2) is ignored, and always considered as "0"*
4. *The maximum AxisID value is 127 (Bit 0 … Bit 6)*
5. *TMLCAN mode: AxisID = (64*ID2_Value - 128) + (8*ID1_Value) + ID0_Value*
6. *CANopen mode: AxisID = (64*ID2_Value) + (8*ID1_Value) + ID0_Value*
7. *If all "IDx" pins are left not connected or connected to GND, the AxisID value is 255 and CANopen mode is selected. In this case, the drive will be in "LSS inactive" state and the Green LED will flash at 1 second intervals*

** where "x" can be 0, 1 or 2*

3.9.2 Pinouts for Micro 4804 MZ-CAT

Micro 4804 MZ-CAT

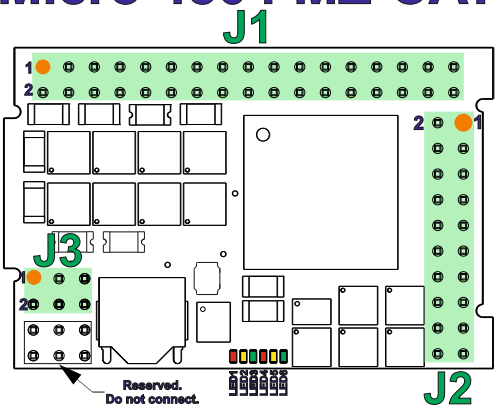

Pins facing downwards view

J1

Pin	Name	Type	Description
1	+Vlog	I	Positive terminal of the logic supply input: 6 to 48 V_{DC}
2	A/A+	O	Phase A for 3-ph motors, A+ for 2-ph steppers, Motor+ for DC brush motors
3	GND	-	Ground return for logic supply
4	B/A-	O	Phase B for 3-ph motors, A- for 2-ph steppers, Motor- for DC brush motors
5	GND	-	Ground return for motor supply & shield for motor windings cable
6	C/B+	O	Phase C for 3-ph motors, B+ for 2-ph steppers
7	+Vmot	I	Positive terminal of the motor supply: 7 to 48 VDC
8	Cr/B-	O	Chopping resistor / Phase B- for 2-ph steppers
9	BFS	-	Boot Fail-Safe: Connect to GND to reprogram firmware in the improbable case when a power loss occurs during a firmware update and the normal firmware recovery fails
10	ID2	I	AxisID2 selection pin. See AxisID register settings table.
11	TX1-	I/O	Transmit/Receive negative, OUT port. Connect to magnetics PHY TX1 or directly to nearby RX0-
12	RX1-	I/O	Receive/Transmit negative, OUT port. Connect to magnetics PHY RX1 or directly to nearby TX0-
13	TX1+	I/O	Transmit/Receive positive, OUT port. Connect to magnetics PHY TX1 or directly to nearby RX0+
14	RX1+	I/O	Receive/Transmit positive, OUT port. Connect to magnetics PHY RX1 or directly to nearby TX0+
15	GND1*	-	Ground shield & center-tap for ECAT magnetics port 1
16	GND0*	-	Ground shield & center-tap for ECAT magnetics port 0
17	TX0-	I/O	Transmit/Receive negative, IN port. Connect to magnetics PHY TX0 or directly to nearby RX1-
18	RX0-	I/O	Receive/Transmit negative, IN port. Connect to magnetics PHY RX0 or directly to nearby TX1-
19	TX0+	I/O	Transmit/Receive positive, IN port. Connect to magnetics PHY TX0 or directly to nearby RX1+
20	RX0+	I/O	Receive/Transmit positive, IN port. Connect to magnetics PHY RX0 or directly to nearby TX1+
21	ID0	I	AxisID0 selection pin. See AxisID register settings table.
22	ID1	I	AxisID1 selection pin. See AxisID register settings table.
23	232TX	O	RS-232 Data Transmission.
24	232RX	I	RS-232 Data Reception.
25 … 26	Rsvd.	-	Reserved. Do not connect.
27	IN2/LSP	I	5-48V digital NPN input. Positive limit switch input
28	IN3/LSN	I	5-48V digital NPN input. Negative limit switch input
29	IN5/Enable	I	5-48V digital NPN input. Drive Enable input
30	I/O0	I/O	5-48V 1.5A NPN (sink) general-purpose digital programmable input IN0 or output OUT0
31	I/O1	I/O	5-48V 0.1A NPN (sink) general-purpose digital programmable input IN1 or output OUT1
32	I/O4	I/O	5-48V 0.1A NPN (sink) general-purpose digital programmable input IN4 or output OUT4
33	GND	-	Ground return and shield
34	AnalogIn	I	Analog input (range software selectable 0-5V or ±10V)

* GND0, GND1, and all other GND pins are internally connected within the drive. However, it is strongly recommended to reserve GND0 and GND1 exclusively for EtherCAT-related functions, and avoid using them for any other purposes.

J2

Pin	Name	Type	Description
1	+V USB	I	USB 5V detect input
2	GND	-	Ground return for USB
3	Hall1	I	Digital Hall, or Linear Hall sensor 1
4	Hall2	I	Digital Hall, or Linear Hall sensor 2
5	Hall3	I	Digital Hall, or Linear Hall sensor 3
6	GND	-	Ground return and shield
7	+5V	O	Supply for all feedback sensors
8	GND	-	Ground return and shield
9	EncA1+/EncA1/ Dt1+/Dt1	I	Encoder 1 A+/Data+ diff. input or single-ended input
10	EncA1-/Dt1-	I	Encoder 1 A-/Data- diff. input. Leave open for single-ended; Add externally 120Ω to pin 9 for differential
11	EncB1+/EncB1/ Clk1+/Clk1	I	Encoder 1 B+/Clock+ diff. input or single-ended input
12	EncB1/ Clk1-	I	Encoder 1 B-/Clock- diff. input. Leave open for single-ended; Add externally 120Ω to pin 11 for differential
13	EncA2+/EncA2/ Dt2+/Dt2	I	Encoder 2 A+/Data+ diff. input or single-ended input
14	EncA2-/Dt2-	I	Encoder 2 A-/Data- diff. input. Leave open for single-ended; Add externally 120Ω to pin 13 for differential
15	EncB2+/EncB2/ Clk2+/Clk2	I/O	Encoder 2 B+/Clock+ diff. input or single-ended input
16	EncB2-/ Clk2-	I	Encoder 2 B-/Clock- diff. input. Leave open for single-ended; Add externally 120Ω to pin 15 for differential
17	Z1+	I	Encoder 1 Z+ diff. input or single-ended input
18	Z1-	I	Encoder 1 Z- diff. input. Leave open for single-ended; Add externally 120Ω to pin 17 for differential
19	USB DM	I/O	USB data-
20	USB DP	I/O	USB data+

J3

Pin	Name	Type	Description
1	ECAT ACT0	O	Shows the state of the physical link and activity for ECAT IN port. Active high, LV-TTL.
2	ECAT ACT1	O	Shows the state of the physical link and activity for ECAT OUT port. Active high, LV-TTL.
3	TML RDY	O	Lit after power-on when the drive initialization ends. Turned off when an error occurs. Active high, LV-TTL.
4	TML ERR	O	Turned on when the drive detects an error condition. Active high, LV-TTL.
5	ECAT RUN	O	EtherCAT® RUN indicator. Active high, LV-TTL.
6	ECAT ERR	O	EtherCAT® ERROR indicator. Active high, LV-TTL.

LEDs

No.	Name	Color	Description
LED1	TML ERR	RED	Turned on when the drive detects an error condition.
LED2	ECAT ACT1	YELLOW	Shows the state of the physical link and activity for ECAT OUT port.
LED3	TML RDY	GREEN	Lit after power-on when the drive initialization ends. Turned off when an error occurs.
LED4	ECAT ERR	RED	EtherCAT® ERROR indicator.
LED5	ECAT ACT0	YELLOW	Shows the state of the physical link and activity for ECAT IN port.
LED6	ECAT RUN	GREEN	EtherCAT® RUN indicator.

AxisID selection

AxisID register

MSB								LSB
Bit 8	Bit 7	Bit 6	Bit 5	Bit 4	Bit 3	Bit 2	Bit 1	Bit 0
ID2			ID1			ID0		

Nominal[V]	Minimum[V]	Maximum[V]	IDx* Bits	IDx* Value
0.000	0.00	0.53	000	0
1.06	0.53	1.41	001	1
1.76	1.41	2.01	010	2
2.25	2.01	2.43	011	3
2.60	2.43	2.75	100	4
2.89	2.75	3.01	101	5
3.13	3.01	3.22	110	6
3.32	3.22	3.30	111	7

Remarks:

*1. AxisID = (64*ID2_Value) + (8*ID1_Value) + ID0_Value*

2. If all "IDx" pins are left not connected or connected to GND, the AxisID value is 255 and the EtherCAT register called "configured station alias" will be 0.

3. Bit 8 (MSB of ID2) is ignored, and always considered as "0"

** where "x" can be 0, 1 or 2*

Micro 4803 MZ-CAN

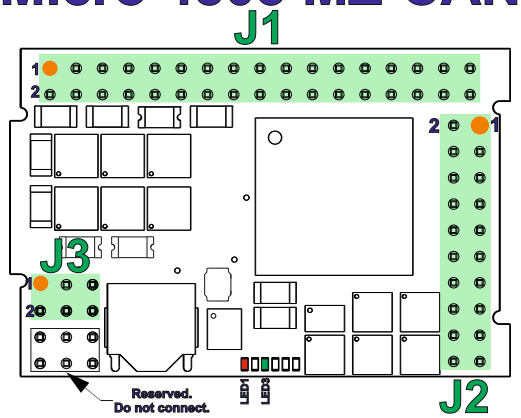

Pins facing downwards view

J1

Pin	Name	Type	Description
1	+Vlog	I	Positive terminal of the logic supply input: 6 to 48 V_{DC}
2	A	O	Phase A for 3-ph motors, Motor+ for DC brush motors
3	GND	-	Ground return for logic supply
4	B	O	Phase B for 3-ph motors, Motor- for DC brush motors
5	GND	-	Ground return for motor supply & shield for motor windings cable
6	C	O	Phase C for 3-ph motors
7	+Vmot	I	Positive terminal of the motor supply: 7 to 48 VDC
8	GND	-	Ground return for logic supply
9	BFS	I	Boot Fail-Safe: Connect to GND to reprogram firmware in the improbable case when a power loss occurs during a firmware update and the normal firmware recovery fails
10	ID2	I	AxisID2 selection pin. See AxisID register settings table.
11 … 14	Rsvd.	-	Reserved. Do not connect.
15	GND	-	Ground return and shield
16	GND	-	Ground return and shield
17 … 20	Rsvd.	-	Reserved. Do not connect.
21	ID0	I	AxisID0 selection pin. See AxisID register settings table.
22	ID1	I	AxisID1 selection pin. See AxisID register settings table.
23	232TX	O	RS-232 Data Transmission.
24	232RX	I	RS-232 Data Reception.
25	CAN Hi	O	CAN-Bus positive line (dominant high)
26	CAN Lo	I	CAN-Bus negative line (dominant low)
27	IN2/LSP	I	5-48V digital NPN input. Positive limit switch input
28	IN3/LSN	I	5-48V digital NPN input. Negative limit switch input
29	IN5/Enable	I	5-48V digital NPN input. Drive Enable input
30	I/O0	I/O	5-48V 1.5A NPN (sink) general-purpose digital programmable input IN0 or output OUT0
31	I/O1	I/O	5-48V 0.1A NPN (sink) general-purpose digital programmable input IN1 or output OUT1
32	I/O4	I/O	5-48V 0.1A NPN (sink) general-purpose digital programmable input IN4 or output OUT4
33	GND	-	Ground return and shield
34	AnalogIn	I	Analog input (range software selectable 0-5V or ±10V)

LEDs

No.	Name	Color	Description
LED1	TML ERR	RED	Turned on when the drive detects an error condition.
LED3	TML RDY	GREEN	Lit after power-on when the drive initialization ends. Turned off when an error occurs.

J2

Pin	Name	Type	Description
1	+V USB	I	USB 5V detect input
2	GND	-	Ground return for USB
3	Hall1	I	Digital Hall, or Linear Hall sensor 1
4	Hall2	I	Digital Hall, or Linear Hall sensor 2
5	Hall3	I	Digital Hall, or Linear Hall sensor 3
6	GND	-	Ground return and shield
7	+5V	O	Supply for all feedback sensors
8	GND	-	Ground return and shield
9	EncA1+/EncA1/ Dt1+/Dt1	I	Encoder 1 A+/Data+ diff. input or single-ended input
10	EncA1-/Dt1-	I	Encoder 1 A-/Data- diff. input. Leave open for single-ended; Add externally 120Ω to pin 9 for differential
11	EncB1+/EncB1/ Clk1+/Clk1	I	Encoder 1 B+/Clock+ diff. input or single-ended input
12	EncB1/ Clk1-	I	Encoder 1 B-/Clock- diff. input. Leave open for single-ended; Add externally 120Ω to pin 11 for differential
13	EncA2+/EncA2/ Dt2+/Dt2	I	Encoder 2 A+/Data+ diff. input or single-ended input
14	EncA2-/Dt2-	I	Encoder 2 A-/Data- diff. input. Leave open for single-ended; Add externally 120Ω to pin 13 for differential
15	EncB2+/EncB2/ Clk2+/Clk2	I/O	Encoder 2 B+/Clock+ diff. input or single-ended input
16	EncB2-/ Clk2-	I	Encoder 2 B-/Clock- diff. input. Leave open for single-ended; Add externally 120Ω to pin 15 for differential
17	Z1+	I	Encoder 1 Z+ diff. input or single-ended input
18	Z1-	I	Encoder 1 Z- diff. input. Leave open for single-ended; Add externally 120Ω to pin 17 for differential
19	USB DM	I/O	USB data-
20	USB DP	I/O	USB data+

J3

Pin	Name	Type	Description
1, 2	Rsvd.	-	Reserved. Do not connect.
3	TML RDY	O	Lit after power-on when the drive initialization ends. Turned off when an error occurs. Active high, LV-TTL.
4	TML ERR	O	Turned on when the drive detects an error condition. Active high, LV-TTL.
5, 6	Rsvd.	-	Reserved. Do not connect.

AxisID selection

AxisID register

MSB								LSB
Bit 8	Bit 7	Bit 6	Bit 5	Bit 4	Bit 3	Bit 2	Bit 1	Bit 0
ID2			ID1			ID0		

Nominal[V]	Minimum[V]	Maximum[V]	IDx* Bits	IDx* Value
0.000	0.00	0.53	**000**	**0**
1.06	0.53	1.41	**001**	**1**
1.76	1.41	2.01	**010**	**2**
2.25	2.01	2.43	**011**	**3**
2.60	2.43	2.75	**100**	**4**
2.89	2.75	3.01	**101**	**5**
3.13	3.01	3.22	**110**	**6**
3.32	3.22	3.30	**111**	**7**

Remarks:

1. *If Bit 7 (ID2) = 1 -> TMLCAN mode is selected*
2. *If Bit 7 (ID2) = 0 -> CANopen mode is selected*
3. *Bit 8 (MSB of ID2) is ignored, and always considered as "0"*
4. *The maximum AxisID value is 127 (Bit 0 … Bit 6)*
5. *TMLCAN mode: AxisID = (64*ID2_Value - 128) + (8*ID1_Value) + ID0_Value*
6. *CANopen mode: AxisID = (64*ID2_Value) + (8*ID1_Value) + ID0_Value*
7. *If all "IDx" pins are left not connected or connected to GND, the AxisID value is 255 and CANopen mode is selected. In this case, the drive will be in "LSS inactive" state and the Green LED will flash at 1 second intervals*

** where "x" can be 0, 1 or 2*

3.9.4 Pinouts for Micro 4803 MZ-CAT

Micro 4803 MZ-CAT

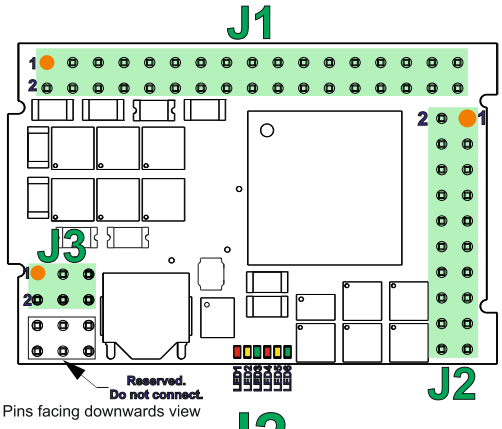

Pins facing downwards view

J1

Pin	Name	Type	Description
1	+Vlog	I	Positive terminal of the logic supply input: 6 to 48 V_{DC}
2	A	O	Phase A for 3-ph motors, Motor+ for DC brush motors
3	GND	-	Ground return for logic supply
4	B	O	Phase B for 3-ph motors, Motor- for DC brush motors
5	GND	-	Ground return for motor supply & shield for motor windings cable
6	C	O	Phase C for 3-ph motors
7	+Vmot	I	Positive terminal of the motor supply: 7 to 48 VDC
8	GND	-	Ground return for logic supply
9	BFS	-	Boot Fail-Safe: Connect to GND to reprogram firmware in the improbable case when a power loss occurs during a firmware update and the normal firmware recovery fails
10	ID2	I	AxisID2 selection pin. See AxisID register settings table.
11	TX1-	I/O	Transmit/Receive negative, OUT port. Connect to magnetics PHY TX1 or directly to nearby RX0-
12	RX1-	I/O	Receive/Transmit negative, OUT port. Connect to magnetics PHY RX1 or directly to nearby TX0-
13	TX1+	I/O	Transmit/Receive positive, OUT port. Connect to magnetics PHY TX1 or directly to nearby RX0+
14	RX1+	I/O	Receive/Transmit positive, OUT port. Connect to magnetics PHY RX1 or directly to nearby TX0+
15	GND1*	-	Ground shield & center-tap for ECAT magnetics port 1
16	GND0*	-	Ground shield & center-tap for ECAT magnetics port 0
17	TX0-	I/O	Transmit/Receive negative, IN port. Connect to magnetics PHY TX0 or directly to nearby RX1-
18	RX0-	I/O	Receive/Transmit negative, IN port. Connect to magnetics PHY RX0 or directly to nearby TX1-
19	TX0+	I/O	Transmit/Receive positive, IN port. Connect to magnetics PHY TX0 or directly to nearby RX1+
20	RX0+	I/O	Receive/Transmit positive, IN port. Connect to magnetics PHY RX0 or directly to nearby TX1+
21	ID0	I	AxisID0 selection pin. See AxisID register settings table.
22	ID1	I	AxisID1 selection pin. See AxisID register settings table.
23	232TX	O	RS-232 Data Transmission.
24	232RX	I	RS-232 Data Reception.
25 … 26	Rsvd.	-	Reserved. Do not connect.
27	IN2/LSP	I	5-48V digital NPN input. Positive limit switch input
28	IN3/LSN	I	5-48V digital NPN input. Negative limit switch input
29	IN5/Enable	I	5-48V digital NPN input. Drive Enable input
30	I/O0	I/O	5-48V 1.5A NPN (sink) general-purpose digital programmable input IN0 or output OUT0
31	I/O1	I/O	5-48V 0.1A NPN (sink) general-purpose digital programmable input IN1 or output OUT1
32	I/O4	I/O	5-48V 0.1A NPN (sink) general-purpose digital programmable input IN4 or output OUT4
33	GND	-	Ground return and shield
34	AnalogIn	I	Analog input (range software selectable 0-5V or ±10V)

* GND0, GND1, and all other GND pins are internally connected within the drive. However, it is strongly recommended to reserve GND0 and GND1 exclusively for EtherCAT-related functions, and avoid using them for any other purposes.

J2

Pin	Name	Type	Description
1	+V USB	I	USB 5V detect input
2	GND	-	Ground return for USB
3	Hall1	I	Digital Hall, or Linear Hall sensor 1
4	Hall2	I	Digital Hall, or Linear Hall sensor 2
5	Hall3	I	Digital Hall, or Linear Hall sensor 3
6	GND	-	Ground return and shield
7	+5V	O	Supply for all feedback sensors
8	GND	-	Ground return and shield
9	EncA1+/EncA1/ Dt1+/Dt1	I	Encoder 1 A+/Data+ diff. input or single-ended input
10	EncA1-/Dt1-	I	Encoder 1 A-/Data- diff. input. Leave open for single-ended; Add externally 120Ω to pin 9 for differential
11	EncB1+/EncB1/ Clk1+/Clk1	I	Encoder 1 B+/Clock+ diff. input or single-ended input
12	EncB1/ Clk1-	I	Encoder 1 B-/Clock- diff. input. Leave open for single-ended; Add externally 120Ω to pin 11 for differential
13	EncA2+/EncA2/ Dt2+/Dt2	I	Encoder 2 A+/Data+ diff. input or single-ended input
14	EncA2-/Dt2-	I	Encoder 2 A-/Data- diff. input. Leave open for single-ended; Add externally 120Ω to pin 13 for differential
15	EncB2+/EncB2/ Clk2+/Clk2	I/O	Encoder 2 B+/Clock+ diff. input or single-ended input
16	EncB2-/ Clk2-	I	Encoder 2 B-/Clock- diff. input. Leave open for single-ended; Add externally 120Ω to pin 15 for differential
17	Z1+	I	Encoder 1 Z+ diff. input or single-ended input
18	Z1-	I	Encoder 1 Z- diff. input. Leave open for single-ended; Add externally 120Ω to pin 17 for differential
19	USB DM	I/O	USB data-
20	USB DP	I/O	USB data+

J3

Pin	Name	Type	Description
1	ECAT ACT0	O	Shows the state of the physical link and activity for ECAT IN port. Active high, LV-TTL.
2	ECAT ACT1	O	Shows the state of the physical link and activity for ECAT OUT port. Active high, LV-TTL.
3	TML RDY	O	Lit after power-on when the drive initialization ends. Turned off when an error occurs. Active high, LV-TTL.
4	TML ERR	O	Turned on when the drive detects an error condition. Active high, LV-TTL.
5	ECAT RUN	O	EtherCAT® RUN indicator. Active high, LV-TTL.
6	ECAT ERR	O	EtherCAT® ERROR indicator. Active high, LV-TTL.

LEDs

No.	Name	Color	Description
LED1	TML ERR	RED	Turned on when the drive detects an error condition.
LED2	ECAT ACT1	YELLOW	Shows the state of the physical link and activity for ECAT OUT port.
LED3	TML RDY	GREEN	Lit after power-on when the drive initialization ends. Turned off when an error occurs.
LED4	ECAT ERR	RED	EtherCAT® ERROR indicator.
LED5	ECAT ACT0	YELLOW	Shows the state of the physical link and activity for ECAT IN port.
LED6	ECAT RUN	GREEN	EtherCAT® RUN indicator.

AxisID selection

AxisID register

MSB								LSB
Bit 8	Bit 7	Bit 6	Bit 5	Bit 4	Bit 3	Bit 2	Bit 1	Bit 0
ID2			ID1			ID0		

Nominal[V]	Minimum[V]	Maximum[V]	IDx* Bits	IDx* Value
0.000	0.00	0.53	**000**	**0**
1.06	0.53	1.41	**001**	**1**
1.76	1.41	2.01	**010**	**2**
2.25	2.01	2.43	**011**	**3**
2.60	2.43	2.75	**100**	**4**
2.89	2.75	3.01	**101**	**5**
3.13	3.01	3.22	**110**	**6**
3.32	3.22	3.30	**111**	**7**

Remarks:

*1. AxisID = (64*ID2_Value) + (8*ID1_Value) + ID0_Value*

2. If all "IDx" pins are left not connected or connected to GND, the AxisID value is 255 and the EtherCAT register called "configured station alias" will be 0.

3. Bit 8 (MSB of ID2) is ignored, and always considered as "0"

** where "x" can be 0, 1 or 2*

3.9.1 Pinouts for Micro 4804 MZ-CAN-STO

Micro 4804 MZ-CAN-STO

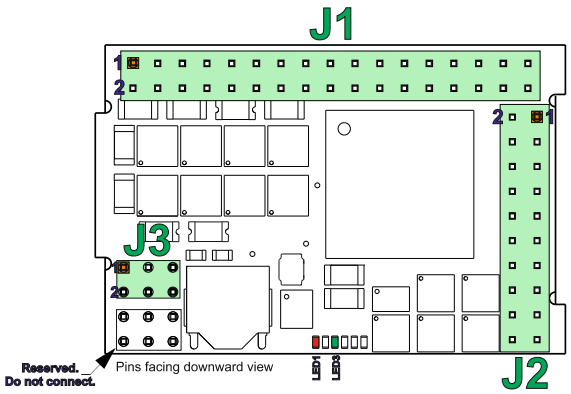

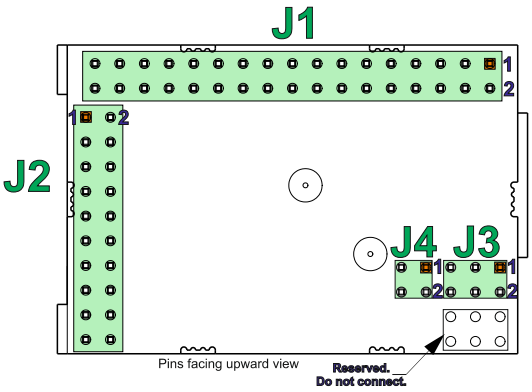

J1

Pin	Name	Type	Description
1	+Vlog	I	Positive terminal of the logic supply input: 6 to 48 V_{DC}
2	A/A+	O	Phase A for 3-ph motors, A+ for 2-ph steppers, Motor+ for DC brush motors
3	GND	-	Ground return for logic supply
4	B/A-	O	Phase B for 3-ph motors, A- for 2-ph steppers, Motor- for DC brush motors
5	GND	-	Ground return for motor supply & shield for motor windings cable
6	C/B+	O	Phase C for 3-ph motors, B+ for 2-ph steppers
7	+Vmot	I	Positive terminal of the motor supply: 7 to 48 VDC
8	Cr/B-	O	Chopping resistor / Phase B- for 2-ph steppers
9	BFS	I	Boot Fail-Safe: Connect to GND to reprogram firmware in the improbable case when a power loss occurs during a firmware update and the normal firmware recovery fails
10	ID2	I	AxisID2 selection pin. See AxisID register settings table.
11 … 14	Rsvd.	-	Reserved. Do not connect.
15	GND	-	Ground return and shield
16	GND	-	Ground return and shield
17 … 20	Rsvd.	-	Reserved. Do not connect.
21	ID0	I	AxisID0 selection pin. See AxisID register settings table.
22	ID1	I	AxisID1 selection pin. See AxisID register settings table.
23	232TX	O	RS-232 Data Transmission.
24	232RX	I	RS-232 Data Reception.
25	CAN Hi	O	CAN-Bus positive line (dominant high)
26	CAN Lo	I	CAN-Bus negative line (dominant low)
27	IN2/LSP	I	5-48V digital NPN input. Positive limit switch input
28	IN3/LSN	I	5-48V digital NPN input. Negative limit switch input
29	IN5/Enable	I	5-48V digital NPN input. Drive Enable input
30	I/O0	I/O	5-48V 1.5A NPN (sink) general-purpose digital programmable input IN0 or output OUT0
31	I/O1	I/O	5-48V 0.1A NPN (sink) general-purpose digital programmable input IN1 or output OUT1
32	I/O4	I/O	5-48V 0.1A NPN (sink) general-purpose digital programmable input IN4 or output OUT4
33	GND	-	Ground return and shield
34	AnalogIn	I	Analog input (range software selectable 0-5V or ±10V)

J2

Pin	Name	Type	Description
1	+V USB	I	USB 5V detect input
2	GND	-	Ground return for USB
3	Hall1	I	Digital Hall, or Linear Hall sensor 1
4	Hall2	I	Digital Hall, or Linear Hall sensor 2
5	Hall3	I	Digital Hall, or Linear Hall sensor 3
6	GND	-	Ground return and shield
7	+5V	O	Supply for all feedback sensors
8	GND	-	Ground return and shield
9	EncA1+/EncA1/ Dt1+/Dt1	I	Encoder 1 A+/Data+ diff. input or single-ended input
10	EncA1-/Dt1-	I	Encoder 1 A-/Data- diff. input. Leave open for single-ended; Add externally 120Ω to pin 9 for differential
11	EncB1+/EncB1/ Clk1+/Clk1	I	Encoder 1 B+/Clock+ diff. input or single-ended input
12	EncB1/ Clk1-	I	Encoder 1 B-/Clock- diff. input. Leave open for single-ended; Add externally 120Ω to pin 11 for differential
13	EncA2+/EncA2/ Dt2+/Dt2	I	Encoder 2 A+/Data+ diff. input or single-ended input
14	EncA2-/Dt2-	I	Encoder 2 A-/Data- diff. input. Leave open for single-ended; Add externally 120Ω to pin 13 for differential
15	EncB2+/EncB2/ Clk2+/Clk2	I/O	Encoder 2 B+/Clock+ diff. input or single-ended input
16	EncB2-/ Clk2-	I	Encoder 2 B-/Clock- diff. input. Leave open for single-ended; Add externally 120Ω to pin 15 for differential
17	Z1+	I	Encoder 1 Z+ diff. input or single-ended input
18	Z1-	I	Encoder 1 Z- diff. input. Leave open for single-ended; Add externally 120Ω to pin 17 for differential
19	USB DM	I/O	USB data-
20	USB DP	I/O	USB data+

J3

Pin	Name	Type	Description
1, 2	Rsvd.	-	Reserved. Do not connect.
3	TML RDY	O	Lit after power-on when the drive initialization ends. Turned off when an error occurs. Active high, LV-TTL.
4	TML ERR	O	Turned on when the drive detects an error condition. Active high, LV-TTL.
5, 6	Rsvd.	-	Reserved. Do not connect.

J4

Pin	Name	Type	Description	
1	STO1+	I	Safe Torque Off input 1, positive input (opto-isolated, 18÷40V)	Apply between both STO1+, STO2+ and STO1-, STO2- 24V DC from SELV/ PELV power supply for motor PWM output operation
2	STO2-	I	Safe Torque Off input 2, negative return (opto-isolated, 0V)	
3	STO1-	I	Safe Torque Off input 1, negative return (opto-isolated, 0V)	
4	STO2+	I	Safe Torque Off input 2, positive input (opto-isolated, 18÷40V)	

AxisID selection

AxisID register

MSB								LSB
Bit 8	Bit 7	Bit 6	Bit 5	Bit 4	Bit 3	Bit 2	Bit 1	Bit 0
ID2			ID1			ID0		

Nominal[V]	Minimum[V]	Maximum[V]	IDx* Bits	IDx* Value
0.000	0.00	0.53	**000**	**0**
1.06	0.53	1.41	**001**	**1**
1.76	1.41	2.01	**010**	**2**
2.25	2.01	2.43	**011**	**3**
2.60	2.43	2.75	**100**	**4**
2.89	2.75	3.01	**101**	**5**
3.13	3.01	3.22	**110**	**6**
3.32	3.22	3.30	**111**	**7**

Remarks:

1. *If Bit 7 (ID2) = 1 -> TMLCAN mode is selected*
2. *If Bit 7 (ID2) = 0 -> CANopen mode is selected*
3. *Bit 8 (MSB of ID2) is ignored, and always considered as "0"*
4. *The maximum AxisID value is 127 (Bit 0 … Bit 6)*
5. *TMLCAN mode: AxisID = (64*ID2_Value - 128) + (8*ID1_Value) + ID0_Value*
6. *CANopen mode: AxisID = (64*ID2_Value) + (8*ID1_Value) + ID0_Value*
7. *If all "IDx" pins are left not connected or connected to GND, the AxisID value is 255 and CANopen mode is selected. In this case, the drive will be in "LSS inactive" state and the Green LED will flash at 1 second intervals*

** where "x" can be 0, 1 or 2*

LEDs

No.	Name	Color	Description
LED1	TML ERR	RED	Turned on when the drive detects an error condition.
LED3	TML RDY	GREEN	Lit after power-on when the drive initialization ends. Turned off when an error occurs.

3.9.2 Pinouts for Micro 4804 MZ-CAT-STO

Micro 4804 MZ-CAT-STO

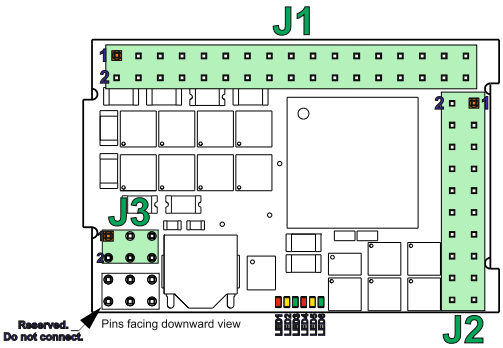

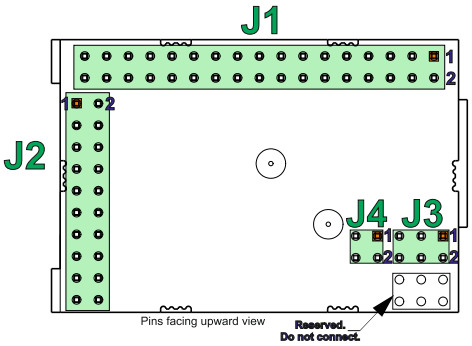

J1

Pin	Name	Type	Description
1	+Vlog	I	Positive terminal of the logic supply input: 6 to 48 V_{DC}
2	A/A+	O	Phase A for 3-ph motors, A+ for 2-ph steppers, Motor+ for DC brush motors
3	GND	-	Ground return for logic supply
4	B/A-	O	Phase B for 3-ph motors, A- for 2-ph steppers, Motor- for DC brush motors
5	GND	-	Ground return for motor supply & shield for motor windings cable
6	C/B+	O	Phase C for 3-ph motors, B+ for 2-ph steppers
7	+Vmot	I	Positive terminal of the motor supply: 7 to 48 VDC
8	Cr/B-	O	Chopping resistor / Phase B- for 2-ph steppers
9	BFS	-	Boot Fail-Safe: Connect to GND to reprogram firmware in the improbable case when a power loss occurs during a firmware update and the normal firmware recovery fails
10	ID2	I	AxisID2 selection pin. See AxisID register settings table.
11	TX1-	I/O	Transmit/Receive negative, OUT port. Connect to magnetics PHY TX1 or directly to nearby RX0-
12	RX1-	I/O	Receive/Transmit negative, OUT port. Connect to magnetics PHY RX1 or directly to nearby TX0-
13	TX1+	I/O	Transmit/Receive positive, OUT port. Connect to magnetics PHY TX1 or directly to nearby RX0+
14	RX1+	I/O	Receive/Transmit positive, OUT port. Connect to magnetics PHY RX1 or directly to nearby TX0+
15	GND1*	-	Ground shield & center-tap for ECAT magnetics port 1
16	GND0*	-	Ground shield & center-tap for ECAT magnetics port 0
17	TX0-	I/O	Transmit/Receive negative, IN port. Connect to magnetics PHY TX0 or directly to nearby RX1-
18	RX0-	I/O	Receive/Transmit negative, IN port. Connect to magnetics PHY RX0 or directly to nearby TX1-
19	TX0+	I/O	Transmit/Receive positive, IN port. Connect to magnetics PHY TX0 or directly to nearby RX1+
20	RX0+	I/O	Receive/Transmit positive, IN port. Connect to magnetics PHY RX0 or directly to nearby TX1+
21	ID0	I	AxisID0 selection pin. See AxisID register settings table.
22	ID1	I	AxisID1 selection pin. See AxisID register settings table.
23	232TX	O	RS-232 Data Transmission.
24	232RX	I	RS-232 Data Reception.
25 … 26	Rsvd.	-	Reserved. Do not connect.
27	IN2/LSP	I	5-48V digital NPN input. Positive limit switch input
28	IN3/LSN	I	5-48V digital NPN input. Negative limit switch input
29	IN5/Enable	I	5-48V digital NPN input. Drive Enable input
30	I/O0	I/O	5-48V 1.5A NPN (sink) general-purpose digital programmable input IN0 or output OUT0
31	I/O1	I/O	5-48V 0.1A NPN (sink) general-purpose digital programmable input IN1 or output OUT1
32	I/O4	I/O	5-48V 0.1A NPN (sink) general-purpose digital programmable input IN4 or output OUT4
33	GND	-	Ground return and shield
34	AnalogIn	I	Analog input (range software selectable 0-5V or ±10V)

* GND0, GND1, and all other GND pins are internally connected within the drive. However, it is strongly recommended to reserve GND0 and GND1 exclusively for EtherCAT-related functions, and avoid using them for any other purposes.

J2

Pin	Name	Type	Description
1	+V USB	I	USB 5V detect input
2	GND	-	Ground return for USB
3	Hall1	I	Digital Hall, or Linear Hall sensor 1
4	Hall2	I	Digital Hall, or Linear Hall sensor 2
5	Hall3	I	Digital Hall, or Linear Hall sensor 3
6	GND	-	Ground return and shield
7	+5V	O	Supply for all feedback sensors
8	GND	-	Ground return and shield
9	EncA1+/EncA1/ Dt1+/Dt1	I	Encoder 1 A+/Data+ diff. input or single-ended input
10	EncA1-/Dt1-	I	Encoder 1 A-/Data- diff. input. Leave open for single-ended; Add externally 120Ω to pin 9 for differential
11	EncB1+/EncB1/ Clk1+/Clk1	I	Encoder 1 B+/Clock+ diff. input or single-ended input
12	EncB1/ Clk1-	I	Encoder 1 B-/Clock- diff. input. Leave open for single-ended; Add externally 120Ω to pin 11 for differential
13	EncA2+/EncA2/ Dt2+/Dt2	I	Encoder 2 A+/Data+ diff. input or single-ended input
14	EncA2-/Dt2-	I	Encoder 2 A-/Data- diff. input. Leave open for single-ended; Add externally 120Ω to pin 13 for differential
15	EncB2+/EncB2/ Clk2+/Clk2	I/O	Encoder 2 B+/Clock+ diff. input or single-ended input
16	EncB2-/ Clk2-	I	Encoder 2 B-/Clock- diff. input. Leave open for single-ended; Add externally 120Ω to pin 15 for differential
17	Z1+	I	Encoder 1 Z+ diff. input or single-ended input
18	Z1-	I	Encoder 1 Z- diff. input. Leave open for single-ended; Add externally 120Ω to pin 17 for differential
19	USB DM	I/O	USB data-
20	USB DP	I/O	USB data+

J3

Pin	Name	Type	Description
1	ECAT ACT0	O	Shows the state of the physical link and activity for ECAT IN port. Active high, LV-TTL.
2	ECAT ACT1	O	Shows the state of the physical link and activity for ECAT OUT port. Active high, LV-TTL.
3	TML RDY	O	Lit after power-on when the drive initialization ends. Turned off when an error occurs. Active high, LV-TTL.
4	TML ERR	O	Turned on when the drive detects an error condition. Active high, LV-TTL.
5	ECAT RUN	O	EtherCAT® RUN indicator. Active high, LV-TTL.
6	ECAT ERR	O	EtherCAT® ERROR indicator. Active high, LV-TTL.

J4

Pin	Name	Type	Description	
1	STO1+	I	Safe Torque Off input 1, positive input (opto-isolated, 18÷40V)	Apply between both STO1+, STO2+ and STO1-, STO2- 24V DC from SELV/ PELV power supply for motor PWM output operation
2	STO2-	I	Safe Torque Off input 2, negative return (opto-isolated, 0V)	
3	STO1-	I	Safe Torque Off input 1, negative return (opto-isolated, 0V)	
4	STO2+	I	Safe Torque Off input 2, positive input (opto-isolated, 18÷40V)	

AxisID selection

AxisID register

MSB								LSB
Bit 8	Bit 7	Bit 6	Bit 5	Bit 4	Bit 3	Bit 2	Bit 1	Bit 0
ID2			ID1			ID0		

Nominal[V]	Minimum[V]	Maximum[V]	IDx* Bits	IDx* Value
0.000	0.00	0.53	000	0
1.06	0.53	1.41	001	1
1.76	1.41	2.01	010	2
2.25	2.01	2.43	011	3
2.60	2.43	2.75	100	4
2.89	2.75	3.01	101	5
3.13	3.01	3.22	110	6
3.32	3.22	3.30	111	7

Remarks:
*1. AxisID = (64*ID2_Value) + (8*ID1_Value) + ID0_Value*
2. If all "IDx" pins are left not connected or connected to GND, the AxisID value is 255 and the EtherCAT register called "configured station alias" will be 0.
3. Bit 8 (MSB of ID2) is ignored, and always considered as "0"
** where "x" can be 0, 1 or 2*

LEDs

No.	Name	Color	Description
LED1	TML ERR	RED	Turned on when the drive detects an error condition.
LED2	ECAT ACT1	YELLOW	Shows the state of the physical link and activity for ECAT OUT port.
LED3	TML RDY	GREEN	Lit after power-on when the drive initialization ends. Turned off when an error occurs.
LED4	ECAT ERR	RED	EtherCAT® ERROR indicator.
LED5	ECAT ACT0	YELLOW	Shows the state of the physical link and activity for ECAT IN port.
LED6	ECAT RUN	GREEN	EtherCAT® RUN indicator.

Micro 4804 PZ-CAN

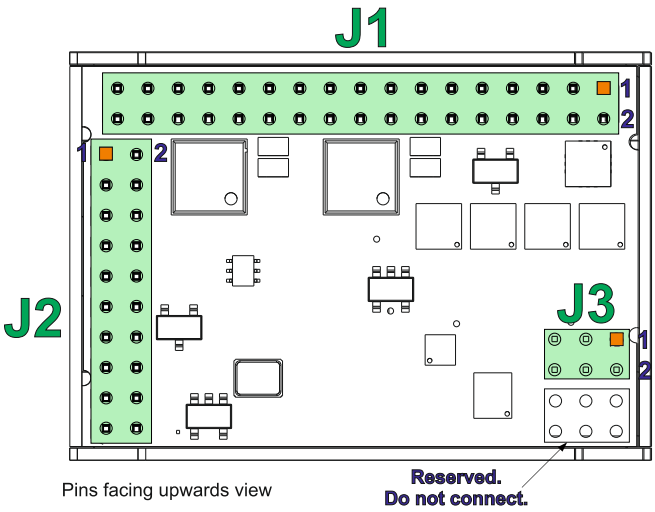

Pins facing upwards view

J1

Pin	Name	Type	Description
1	+Vlog	I	Positive terminal of the logic supply input: 6 to 48 V_{DC}
2	A/A+	O	Phase A for 3-ph motors, A+ for 2-ph steppers, Motor+ for DC brush motors
3	GND	-	Ground return for logic supply
4	B/A-	O	Phase B for 3-ph motors, A- for 2-ph steppers, Motor- for DC brush motors
5	GND	-	Ground return for motor supply & shield for motor windings cable
6	C/B+	O	Phase C for 3-ph motors, B+ for 2-ph steppers
7	+Vmot	I	Positive terminal of the motor supply: 7 to 48 VDC
8	Cr/B-	O	Chopping resistor / Phase B- for 2-ph steppers
9	BFS	I	Boot Fail-Safe: Connect to GND to reprogram firmware in the improbable case when a power loss occurs during a firmware update and the normal firmware recovery fails
10	ID2	I	AxisID2 selection pin. See AxisID register settings table.
11 … 14	Rsvd.	-	Reserved. Do not connect.
15	GND	-	Ground return and shield
16	GND	-	Ground return and shield
17 … 20	Rsvd.	-	Reserved. Do not connect.
21	ID0	I	AxisID0 selection pin. See AxisID register settings table.
22	ID1	I	AxisID1 selection pin. See AxisID register settings table.
23	232TX	O	RS-232 Data Transmission.
24	232RX	I	RS-232 Data Reception.
25	CAN Hi	O	CAN-Bus positive line (dominant high)
26	CAN Lo	I	CAN-Bus negative line (dominant low)
27	IN2/LSP	I	5-48V digital NPN input. Positive limit switch input
28	IN3/LSN	I	5-48V digital NPN input. Negative limit switch input
29	IN5/Enable	I	5-48V digital NPN input. Drive Enable input
30	I/O0	I/O	5-48V 1.5A NPN (sink) general-purpose digital programmable input IN0 or output OUT0
31	I/O1	I/O	5-48V 0.1A NPN (sink) general-purpose digital programmable input IN1 or output OUT1
32	I/O4	I/O	5-48V 0.1A NPN (sink) general-purpose digital programmable input IN4 or output OUT4
33	GND	-	Ground return and shield
34	AnalogIn	I	Analog input (range software selectable 0-5V or ±10V)

J2

Pin	Name	Type	Description
1	+V USB	I	USB 5V detect input
2	GND	-	Ground return for USB
3	Hall1	I	Digital Hall, or Linear Hall sensor 1
4	Hall2	I	Digital Hall, or Linear Hall sensor 2
5	Hall3	I	Digital Hall, or Linear Hall sensor 3
6	GND	-	Ground return and shield
7	+5V	O	Supply for all feedback sensors
8	GND	-	Ground return and shield
9	EncA1+/EncA1/ Dt1+/Dt1	I	Encoder 1 A+/Data+ diff. input or single-ended input
10	EncA1-/Dt1-	I	Encoder 1 A-/Data- diff. input. Leave open for single-ended; Add externally 120Ω to pin 9 for differential
11	EncB1+/EncB1/ Clk1+/Clk1	I	Encoder 1 B+/Clock+ diff. input or single-ended input
12	EncB1/ Clk1-	I	Encoder 1 B-/Clock- diff. input. Leave open for single-ended; Add externally 120Ω to pin 11 for differential
13	EncA2+/EncA2/ Dt2+/Dt2	I	Encoder 2 A+/Data+ diff. input or single-ended input
14	EncA2-/Dt2-	I	Encoder 2 A-/Data- diff. input. Leave open for single-ended; Add externally 120Ω to pin 13 for differential
15	EncB2+/EncB2/ Clk2+/Clk2	I/O	Encoder 2 B+/Clock+ diff. input or single-ended input
16	EncB2-/ Clk2-	I	Encoder 2 B-/Clock- diff. input. Leave open for single-ended; Add externally 120Ω to pin 15 for differential
17	Z1+	I	Encoder 1 Z+ diff. input or single-ended input
18	Z1-	I	Encoder 1 Z- diff. input. Leave open for single-ended; Add externally 120Ω to pin 17 for differential
19	USB DM	I/O	USB data-
20	USB DP	I/O	USB data+

J3

Pin	Name	Type	Description
1, 2	Rsvd.	-	Reserved. Do not connect.
3	TML RDY	O	Lit after power-on when the drive initialization ends. Turned off when an error occurs. Active high, LV-TTL.
4	TML ERR	O	Turned on when the drive detects an error condition. Active high, LV-TTL.
5, 6	Rsvd.	-	Reserved. Do not connect.

AxisID selection

AxisID register

MSB								LSB
Bit 8	Bit 7	Bit 6	Bit 5	Bit 4	Bit 3	Bit 2	Bit 1	Bit 0
ID2			ID1			ID0		

Nominal[V]	Minimum[V]	Maximum[V]	IDx* Bits	IDx* Value
0.000	0.00	0.53	000	0
1.06	0.53	1.41	001	1
1.76	1.41	2.01	010	2
2.25	2.01	2.43	011	3
2.60	2.43	2.75	100	4
2.89	2.75	3.01	101	5
3.13	3.01	3.22	110	6
3.32	3.22	3.30	111	7

Remarks:

1. *If Bit 7 (ID2) = 1 -> TMLCAN mode is selected*
2. *If Bit 7 (ID2) = 0 -> CANopen mode is selected*
3. *Bit 8 (MSB of ID2) is ignored, and always considered as "0"*
4. *The maximum AxisID value is 127 (Bit 0 … Bit 6)*
5. *TMLCAN mode: AxisID = (64*ID2_Value - 128) + (8*ID1_Value) + ID0_Value*
6. *CANopen mode: AxisID = (64*ID2_Value) + (8*ID1_Value) + ID0_Value*
7. *If all "IDx" pins are left not connected or connected to GND, the AxisID value is 255 and CANopen mode is selected. In this case, the drive will be in "LSS inactive" state and the Green LED will flash at 1 second intervals*

** where "x" can be 0, 1 or 2*

Micro 4804 PZ-CAT

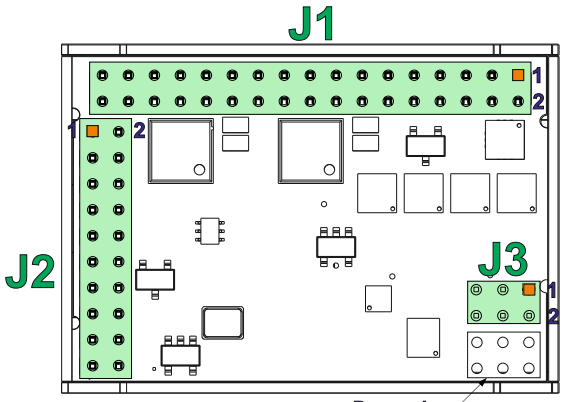

Pins facing upwards view

J1

Pin	Name	Type	Description
1	+Vlog	I	Positive terminal of the logic supply input: 6 to 48 V_{DC}
2	A/A+	O	Phase A for 3-ph motors, A+ for 2-ph steppers, Motor+ for DC brush motors
3	GND	-	Ground return for logic supply
4	B/A-	O	Phase B for 3-ph motors, A- for 2-ph steppers, Motor- for DC brush motors
5	GND	-	Ground return for motor supply & shield for motor windings cable
6	C/B+	O	Phase C for 3-ph motors, B+ for 2-ph steppers
7	+Vmot	I	Positive terminal of the motor supply: 7 to 48 VDC
8	Cr/B-	O	Chopping resistor / Phase B- for 2-ph steppers
9	BFS	-	Boot Fail-Safe: Connect to GND to reprogram firmware in the improbable case when a power loss occurs during a firmware update and the normal firmware recovery fails
10	ID2	I	AxisID2 selection pin. See AxisID register settings table.
11	TX1-	I/O	Transmit/Receive negative, OUT port. Connect to magnetics PHY TX1 or directly to nearby RX0-
12	RX1-	I/O	Receive/Transmit negative, OUT port. Connect to magnetics PHY RX1 or directly to nearby TX0-
13	TX1+	I/O	Transmit/Receive positive, OUT port. Connect to magnetics PHY TX1 or directly to nearby RX0+
14	RX1+	I/O	Receive/Transmit positive, OUT port. Connect to magnetics PHY RX1 or directly to nearby TX0+
15	GND1*	-	Ground shield & center-tap for ECAT magnetics port 1
16	GND0*	-	Ground shield & center-tap for ECAT magnetics port 0
17	TX0-	I/O	Transmit/Receive negative, IN port. Connect to magnetics PHY TX0 or directly to nearby RX1-
18	RX0-	I/O	Receive/Transmit negative, IN port. Connect to magnetics PHY RX0 or directly to nearby TX1-
19	TX0+	I/O	Transmit/Receive positive, IN port. Connect to magnetics PHY TX0 or directly to nearby RX1+
20	RX0+	I/O	Receive/Transmit positive, IN port. Connect to magnetics PHY RX0 or directly to nearby TX1+
21	ID0	I	AxisID0 selection pin. See AxisID register settings table.
22	ID1	I	AxisID1 selection pin. See AxisID register settings table.
23	232TX	O	RS-232 Data Transmission.
24	232RX	I	RS-232 Data Reception.
25 … 26	Rsvd.	-	Reserved. Do not connect.
27	IN2/LSP	I	5-48V digital NPN input. Positive limit switch input
28	IN3/LSN	I	5-48V digital NPN input. Negative limit switch input
29	IN5/Enable	I	5-48V digital NPN input. Drive Enable input
30	I/O0	I/O	5-48V 1.5A NPN (sink) general-purpose digital programmable input IN0 or output OUT0
31	I/O1	I/O	5-48V 0.1A NPN (sink) general-purpose digital programmable input IN1 or output OUT1
32	I/O4	I/O	5-48V 0.1A NPN (sink) general-purpose digital programmable input IN4 or output OUT4
33	GND	-	Ground return and shield
34	AnalogIn	I	Analog input (range software selectable 0-5V or ±10V)

* GND0, GND1, and all other GND pins are internally connected within the drive. However, it is strongly recommended to reserve GND0 and GND1 exclusively for EtherCAT-related functions, and avoid using them for any other purposes.

J2

Pin	Name	Type	Description
1	+V USB	I	USB 5V detect input
2	GND	-	Ground return for USB
3	Hall1	I	Digital Hall, or Linear Hall sensor 1
4	Hall2	I	Digital Hall, or Linear Hall sensor 2
5	Hall3	I	Digital Hall, or Linear Hall sensor 3
6	GND	-	Ground return and shield
7	+5V	O	Supply for all feedback sensors
8	GND	-	Ground return and shield
9	EncA1+/EncA1/ Dt1+/Dt1	I	Encoder 1 A+/Data+ diff. input or single-ended input
10	EncA1-/Dt1-	I	Encoder 1 A-/Data- diff. input. Leave open for single-ended; Add externally 120Ω to pin 9 for differential
11	EncB1+/EncB1/ Clk1+/Clk1	I	Encoder 1 B+/Clock+ diff. input or single-ended input
12	EncB1/ Clk1-	I	Encoder 1 B-/Clock- diff. input. Leave open for single-ended; Add externally 120Ω to pin 11 for differential
13	EncA2+/EncA2/ Dt2+/Dt2	I	Encoder 2 A+/Data+ diff. input or single-ended input
14	EncA2-/Dt2-	I	Encoder 2 A-/Data- diff. input. Leave open for single-ended; Add externally 120Ω to pin 13 for differential
15	EncB2+/EncB2/ Clk2+/Clk2	I/O	Encoder 2 B+/Clock+ diff. input or single-ended input
16	EncB2-/ Clk2-	I	Encoder 2 B-/Clock- diff. input. Leave open for single-ended; Add externally 120Ω to pin 15 for differential
17	Z1+	I	Encoder 1 Z+ diff. input or single-ended input
18	Z1-	I	Encoder 1 Z- diff. input. Leave open for single-ended; Add externally 120Ω to pin 17 for differential
19	USB DM	I/O	USB data-
20	USB DP	I/O	USB data+

J3

Pin	Name	Type	Description
1	ECAT ACT0	O	Shows the state of the physical link and activity for ECAT IN port. Active high, LV-TTL.
2	ECAT ACT1	O	Shows the state of the physical link and activity for ECAT OUT port. Active high, LV-TTL.
3	TML RDY	O	Lit after power-on when the drive initialization ends. Turned off when an error occurs. Active high, LV-TTL.
4	TML ERR	O	Turned on when the drive detects an error condition. Active high, LV-TTL.
5	ECAT RUN	O	EtherCAT® RUN indicator. Active high, LV-TTL.
6	ECAT ERR	O	EtherCAT® ERROR indicator. Active high, LV-TTL.

AxisID selection

AxisID register (MSB → LSB)

Bit 8	Bit 7	Bit 6	Bit 5	Bit 4	Bit 3	Bit 2	Bit 1	Bit 0
ID2			ID1			ID0		

Nominal[V]	Minimum[V]	Maximum[V]	IDx* Bits	IDx* Value
0.000	0.00	0.53	000	0
1.06	0.53	1.41	001	1
1.76	1.41	2.01	010	2
2.25	2.01	2.43	011	3
2.60	2.43	2.75	100	4
2.89	2.75	3.01	101	5
3.13	3.01	3.22	110	6
3.32	3.22	3.30	111	7

Remarks:

*1. AxisID = (64*ID2_Value) + (8*ID1_Value) + ID0_Value*

2. If all "IDx" pins are left not connected or connected to GND, the AxisID value is 255 and the EtherCAT register called "configured station alias" will be 0.

3. Bit 8 (MSB of ID2) is ignored, and always considered as "0"

** where "x" can be 0, 1 or 2*

3.9.5 Pinouts for Micro 4804 PZ-CAN-STO

Micro 4804 PZ-CAN-STO

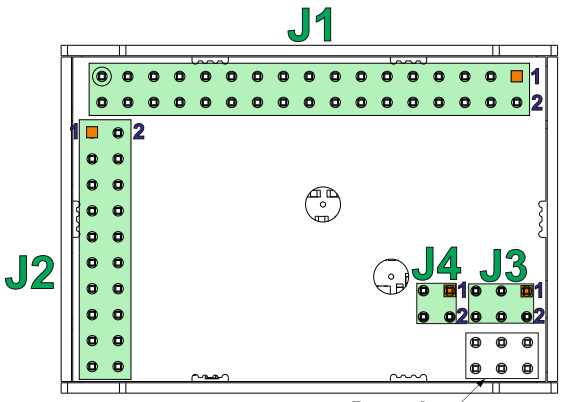

J1

Pin	Name	Type	Description
1	+Vlog	I	Positive terminal of the logic supply input: 6 to 48 V_{DC}
2	A/A+	O	Phase A for 3-ph motors, A+ for 2-ph steppers, Motor+ for DC brush motors
3	GND	-	Ground return for logic supply
4	B/A-	O	Phase B for 3-ph motors, A- for 2-ph steppers, Motor- for DC brush motors
5	GND	-	Ground return for motor supply & shield for motor windings cable
6	C/B+	O	Phase C for 3-ph motors, B+ for 2-ph steppers
7	+Vmot	I	Positive terminal of the motor supply: 7 to 48 VDC
8	Cr/B-	O	Chopping resistor / Phase B- for 2-ph steppers
9	BFS	I	Boot Fail-Safe: Connect to GND to reprogram firmware in the improbable case when a power loss occurs during a firmware update and the normal firmware recovery fails
10	ID2	I	AxisID2 selection pin. See AxisID register settings table.
11 … 14	Rsvd.	-	Reserved. Do not connect.
15	GND	-	Ground return and shield
16	GND	-	Ground return and shield
17 … 20	Rsvd.	-	Reserved. Do not connect.
21	ID0	I	AxisID0 selection pin. See AxisID register settings table.
22	ID1	I	AxisID1 selection pin. See AxisID register settings table.
23	232TX	O	RS-232 Data Transmission.
24	232RX	I	RS-232 Data Reception.
25	CAN Hi	O	CAN-Bus positive line (dominant high)
26	CAN Lo	I	CAN-Bus negative line (dominant low)
27	IN2/LSP	I	5-48V digital NPN input. Positive limit switch input
28	IN3/LSN	I	5-48V digital NPN input. Negative limit switch input
29	IN5/Enable	I	5-48V digital NPN input. Drive Enable input
30	I/O0	I/O	5-48V 1.5A NPN (sink) general-purpose digital programmable input IN0 or output OUT0
31	I/O1	I/O	5-48V 0.1A NPN (sink) general-purpose digital programmable input IN1 or output OUT1
32	I/O4	I/O	5-48V 0.1A NPN (sink) general-purpose digital programmable input IN4 or output OUT4
33	GND	-	Ground return and shield
34	AnalogIn	I	Analog input (range software selectable 0-5V or ±10V)

J2

Pin	Name	Type	Description
1	+V USB	I	USB 5V detect input
2	GND	-	Ground return for USB
3	Hall1	I	Digital Hall, or Linear Hall sensor 1
4	Hall2	I	Digital Hall, or Linear Hall sensor 2
5	Hall3	I	Digital Hall, or Linear Hall sensor 3
6	GND	-	Ground return and shield
7	+5V	O	Supply for all feedback sensors
8	GND	-	Ground return and shield
9	EncA1+/EncA1/ Dt1+/Dt1	I	Encoder 1 A+/Data+ diff. input or single-ended input
10	EncA1-/Dt1-	I	Encoder 1 A-/Data- diff. input. Leave open for single-ended; Add externally 120Ω to pin 9 for differential
11	EncB1+/EncB1/ Clk1+/Clk1	I	Encoder 1 B+/Clock+ diff. input or single-ended input
12	EncB1/ Clk1-	I	Encoder 1 B-/Clock- diff. input. Leave open for single-ended; Add externally 120Ω to pin 11 for differential
13	EncA2+/EncA2/ Dt2+/Dt2	I	Encoder 2 A+/Data+ diff. input or single-ended input
14	EncA2-/Dt2-	I	Encoder 2 A-/Data- diff. input. Leave open for single-ended; Add externally 120Ω to pin 13 for differential
15	EncB2+/EncB2/ Clk2+/Clk2	I/O	Encoder 2 B+/Clock+ diff. input or single-ended input
16	EncB2-/ Clk2-	I	Encoder 2 B-/Clock- diff. input. Leave open for single-ended; Add externally 120Ω to pin 15 for differential
17	Z1+	I	Encoder 1 Z+ diff. input or single-ended input
18	Z1-	I	Encoder 1 Z- diff. input. Leave open for single-ended; Add externally 120Ω to pin 17 for differential
19	USB DM	I/O	USB data-
20	USB DP	I/O	USB data+

J3

Pin	Name	Type	Description
1, 2	Rsvd.	-	Reserved. Do not connect.
3	TML RDY	O	Lit after power-on when the drive initialization ends. Turned off when an error occurs. Active high, LV-TTL.
4	TML ERR	O	Turned on when the drive detects an error condition. Active high, LV-TTL.
5, 6	Rsvd.	-	Reserved. Do not connect.

J4

Pin	Name	Type	Description
1	STO1+	I	Safe Torque Off input 1, positive input (opto-isolated, 18÷40V)
2	STO2-	I	Safe Torque Off input 2, negative return (opto-isolated, 0V)
3	STO1-	I	Safe Torque Off input 1, negative return (opto-isolated, 0V)
4	STO2+	I	Safe Torque Off input 2, positive input (opto-isolated, 18÷40V)

Apply between both STO1+, STO2+ and STO1-, STO2- 24V DC from SELV/ PELV power supply for motor PWM output operation

AxisID selection

AxisID register

MSB							LSB
Bit 8	Bit 7	Bit 6	Bit 5	Bit 4	Bit 3	Bit 2	Bit 1	Bit 0
ID2			ID1			ID0		

Nominal[V]	Minimum[V]	Maximum[V]	IDx* Bits	IDx* Value
0.000	0.00	0.53	000	0
1.06	0.53	1.41	001	1
1.76	1.41	2.01	010	2
2.25	2.01	2.43	011	3
2.60	2.43	2.75	100	4
2.89	2.75	3.01	101	5
3.13	3.01	3.22	110	6
3.32	3.22	3.30	111	7

Remarks:

1. *If Bit 7 (ID2) = 1 -> TMLCAN mode is selected*
2. *If Bit 7 (ID2) = 0 -> CANopen mode is selected*
3. *Bit 8 (MSB of ID2) is ignored, and always considered as "0"*
4. *The maximum AxisID value is 127 (Bit 0 … Bit 6)*
5. *TMLCAN mode: AxisID = (64*ID2_Value - 128) + (8*ID1_Value) + ID0_Value*
6. *CANopen mode: AxisID = (64*ID2_Value) + (8*ID1_Value) + ID0_Value*
7. *If all "IDx" pins are left not connected or connected to GND, the AxisID value is 255 and CANopen mode is selected. In this case, the drive will be in "LSS inactive" state and the Green LED will flash at 1 second intervals*

** where "x" can be 0, 1 or 2*

Micro 4804 PZ-CAT-STO

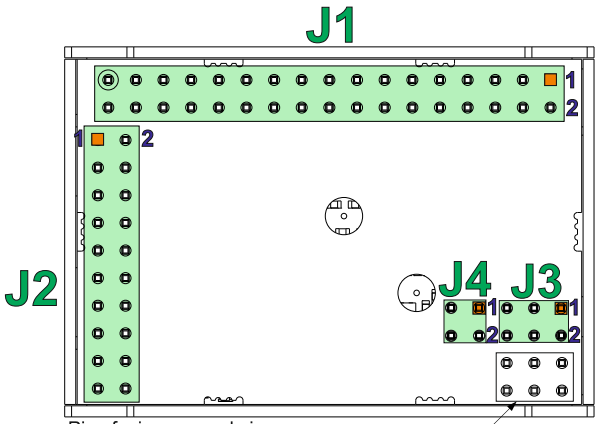

J1

Pin	Name	Type	Description
1	+Vlog	I	Positive terminal of the logic supply input: 6 to 48 V_{DC}
2	A/A+	O	Phase A for 3-ph motors, A+ for 2-ph steppers, Motor+ for DC brush motors
3	GND	-	Ground return for logic supply
4	B/A-	O	Phase B for 3-ph motors, A- for 2-ph steppers, Motor- for DC brush motors
5	GND	-	Ground return for motor supply & shield for motor windings cable
6	C/B+	O	Phase C for 3-ph motors, B+ for 2-ph steppers
7	+Vmot	I	Positive terminal of the motor supply: 7 to 48 VDC
8	Cr/B-	O	Chopping resistor / Phase B- for 2-ph steppers
9	BFS	-	Boot Fail-Safe: Connect to GND to reprogram firmware in the improbable case when a power loss occurs during a firmware update and the normal firmware recovery fails
10	ID2	I	AxisID2 selection pin. See AxisID register settings table.
11	TX1-	I/O	Transmit/Receive negative, OUT port. Connect to magnetics PHY TX1 or directly to nearby RX0-
12	RX1-	I/O	Receive/Transmit negative, OUT port. Connect to magnetics PHY RX1 or directly to nearby TX0-
13	TX1+	I/O	Transmit/Receive positive, OUT port. Connect to magnetics PHY TX1 or directly to nearby RX0+
14	RX1+	I/O	Receive/Transmit positive, OUT port. Connect to magnetics PHY RX1 or directly to nearby TX0+
15	GND1*	-	Ground shield & center-tap for ECAT magnetics port 1
16	GND0*	-	Ground shield & center-tap for ECAT magnetics port 0
17	TX0-	I/O	Transmit/Receive negative, IN port. Connect to magnetics PHY TX0 or directly to nearby RX1-
18	RX0-	I/O	Receive/Transmit negative, IN port. Connect to magnetics PHY RX0 or directly to nearby TX1-
19	TX0+	I/O	Transmit/Receive positive, IN port. Connect to magnetics PHY TX0 or directly to nearby RX1+
20	RX0+	I/O	Receive/Transmit positive, IN port. Connect to magnetics PHY RX0 or directly to nearby TX1+
21	ID0	I	AxisID0 selection pin. See AxisID register settings table.
22	ID1	I	AxisID1 selection pin. See AxisID register settings table.
23	232TX	O	RS-232 Data Transmission.
24	232RX	I	RS-232 Data Reception.
25 … 26	Rsvd.	-	Reserved. Do not connect.
27	IN2/LSP	I	5-48V digital NPN input. Positive limit switch input
28	IN3/LSN	I	5-48V digital NPN input. Negative limit switch input
29	IN5/Enable	I	5-48V digital NPN input. Drive Enable input
30	I/O0	I/O	5-48V 1.5A NPN (sink) general-purpose digital programmable input IN0 or output OUT0
31	I/O1	I/O	5-48V 0.1A NPN (sink) general-purpose digital programmable input IN1 or output OUT1
32	I/O4	I/O	5-48V 0.1A NPN (sink) general-purpose digital programmable input IN4 or output OUT4
33	GND	-	Ground return and shield
34	AnalogIn	I	Analog input (range software selectable 0-5V or ±10V)

* GND0, GND1, and all other GND pins are internally connected within the drive. However, it is strongly recommended to reserve GND0 and GND1 exclusively for EtherCAT-related functions, and avoid using them for any other purposes.

J2

Pin	Name	Type	Description
1	+V USB	I	USB 5V detect input
2	GND	-	Ground return for USB
3	Hall1	I	Digital Hall, or Linear Hall sensor 1
4	Hall2	I	Digital Hall, or Linear Hall sensor 2
5	Hall3	I	Digital Hall, or Linear Hall sensor 3
6	GND	-	Ground return and shield
7	+5V	O	Supply for all feedback sensors
8	GND	-	Ground return and shield
9	EncA1+/EncA1/ Dt1+/Dt1	I	Encoder 1 A+/Data+ diff. input or single-ended input
10	EncA1-/Dt1-	I	Encoder 1 A-/Data- diff. input. Leave open for single-ended; Add externally 120Ω to pin 9 for differential
11	EncB1+/EncB1/ Clk1+/Clk1	I	Encoder 1 B+/Clock+ diff. input or single-ended input
12	EncB1/ Clk1-	I	Encoder 1 B-/Clock- diff. input. Leave open for single-ended; Add externally 120Ω to pin 11 for differential
13	EncA2+/EncA2/ Dt2+/Dt2	I	Encoder 2 A+/Data+ diff. input or single-ended input
14	EncA2-/Dt2-	I	Encoder 2 A-/Data- diff. input. Leave open for single-ended; Add externally 120Ω to pin 13 for differential
15	EncB2+/EncB2/ Clk2+/Clk2	I/O	Encoder 2 B+/Clock+ diff. input or single-ended input
16	EncB2-/ Clk2-	I	Encoder 2 B-/Clock- diff. input. Leave open for single-ended; Add externally 120Ω to pin 15 for differential
17	Z1+	I	Encoder 1 Z+ diff. input or single-ended input
18	Z1-	I	Encoder 1 Z- diff. input. Leave open for single-ended; Add externally 120Ω to pin 17 for differential
19	USB DM	I/O	USB data-
20	USB DP	I/O	USB data+

J4

Pin	Name	Type	Description	
1	STO1+	I	Safe Torque Off input 1, positive input (opto-isolated, 18÷40V)	Apply between both STO1+, STO2+ and STO1-, STO2- 24V DC from SELV/ PELV power supply for motor PWM output operation
2	STO2-	I	Safe Torque Off input 2, negative return (opto-isolated, 0V)	
3	STO1-	I	Safe Torque Off input 1, negative return (opto-isolated, 0V)	
4	STO2+	I	Safe Torque Off input 2, positive input (opto-isolated, 18÷40V)	

J3

Pin	Name	Type	Description
1	ECAT ACT0	O	Shows the state of the physical link and activity for ECAT IN port. Active high, LV-TTL.
2	ECAT ACT1	O	Shows the state of the physical link and activity for ECAT OUT port. Active high, LV-TTL.
3	TML RDY	O	Lit after power-on when the drive initialization ends. Turned off when an error occurs. Active high, LV-TTL.
4	TML ERR	O	Turned on when the drive detects an error condition. Active high, LV-TTL.
5	ECAT RUN	O	EtherCAT® RUN indicator. Active high, LV-TTL.
6	ECAT ERR	O	EtherCAT® ERROR indicator. Active high, LV-TTL.

AxisID selection

AxisID register

MSB								LSB
Bit 8	Bit 7	Bit 6	Bit 5	Bit 4	Bit 3	Bit 2	Bit 1	Bit 0
ID2			ID1			ID0		

Nominal[V]	Minimum[V]	Maximum[V]	IDx* Bits	IDx* Value
0.000	0.00	0.53	000	0
1.06	0.53	1.41	001	1
1.76	1.41	2.01	010	2
2.25	2.01	2.43	011	3
2.60	2.43	2.75	100	4
2.89	2.75	3.01	101	5
3.13	3.01	3.22	110	6
3.32	3.22	3.30	111	7

Remarks:
*1. AxisID = (64*ID2_Value) + (8*ID1_Value) + ID0_Value*
2. If all "IDx" pins are left not connected or connected to GND, the AxisID value is 255 and the EtherCAT register called "configured station alias" will be 0.
3. Bit 8 (MSB of ID2) is ignored, and always considered as "0"
** where "x" can be 0, 1 or 2*

3.9.7 Pinouts for Micro 4804 LZ -CAN

Micro 4804 LZ-CAN

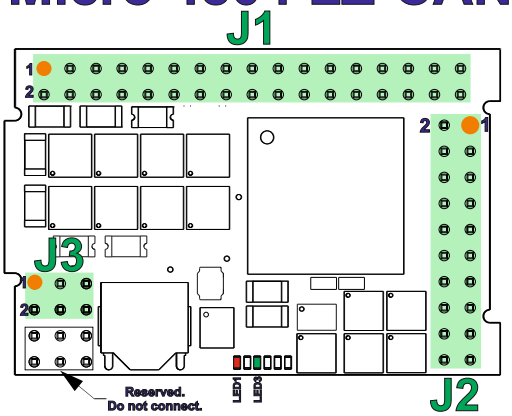

Pins facing downwards view

J1

Pin	Name	Type	Description
1	+Vlog	I	Positive terminal of the logic supply input: 6 to 48 V_{DC}
2	A/A+	O	Phase A for 3-ph motors, A+ for 2-ph steppers, Motor+ for DC brush motors
3	GND	-	Ground return for logic supply
4	B/A-	O	Phase B for 3-ph motors, A- for 2-ph steppers, Motor- for DC brush motors
5	GND	-	Ground return for motor supply & shield for motor windings cable
6	C/B+	O	Phase C for 3-ph motors, B+ for 2-ph steppers
7	+Vmot	I	Positive terminal of the motor supply: 7 to 48 VDC
8	Cr/B-	O	Chopping resistor / Phase B- for 2-ph steppers
9	BFS	I	Boot Fail-Safe: Connect to GND to reprogram firmware in the improbable case when a power loss occurs during a firmware update and the normal firmware recovery fails
10	ID2	I	AxisID2 selection pin. See AxisID register settings table.
11 … 14	Rsvd.	-	Reserved. Do not connect.
15	GND	-	Ground return and shield
16	GND	-	Ground return and shield
17 … 20	Rsvd.	-	Reserved. Do not connect.
21	ID0	I	AxisID0 selection pin. See AxisID register settings table.
22	ID1	I	AxisID1 selection pin..See AxisID register settings table.
23	232TX	O	RS-232 Data Transmission.
24	232RX	I	RS-232 Data Reception.
25	CAN Hi	O	CAN-Bus positive line (dominant high)
26	CAN Lo	I	CAN-Bus negative line (dominant low)
27	IN2/LSP	I	5-48V digital NPN input. Positive limit switch input
28	IN3/LSN	I	5-48V digital NPN input. Negative limit switch input
29	IN5/Enable	I	5-48V digital NPN input. Drive Enable input
30	I/O0	I/O	5-48V 1.5A NPN (sink) general-purpose digital programmable input IN0 or output OUT0
31	I/O1	I/O	5-48V 0.1A NPN (sink) general-purpose digital programmable input IN1 or output OUT1
32	I/O4	I/O	5-48V 0.1A NPN (sink) general-purpose digital programmable input IN4 or output OUT4
33	GND	-	Ground return and shield
34	AnalogIn	I	Analog input (range software selectable 0-5V or ±10V)

LEDs

No.	Name	Color	Description
LED1	TML ERR	RED	Turned on when the drive detects an error condition.
LED3	TML RDY	GREEN	Lit after power-on when the drive initialization ends. Turned off when an error occurs.

J2

Pin	Name	Type	Description
1	+V USB	I	USB 5V detect input
2	GND	-	Ground return for USB
3	Hall1	I	Digital Hall sensor 1
4	Hall2	I	Digital Hall sensor 2
5	Hall3	I	Digital Hall sensor 3
6	GND	-	Ground return and shield
7	+5V	O	Supply for all feedback sensors
8	GND	-	Ground return and shield
9	EncA+/ EncA	I	Encoder A+ diff. input or single-ended input
10	EncA-	I	Encoder A- diff. input. Leave open for single-ended; Add externally 120Ω to pin 9 for differential
11	EncB+/ EncB	I	Encoder B diff. input or single-ended input
12	EncB-	I	Encoder B- diff. input. Leave open for single-ended; Add externally 120Ω to pin 11 for differential
13 … 16	Rsvd.	-	Reserved. Do not use.
17	EncZ+/EncZ	I	Encoder Z+ diff. input or single-ended input
18	EncZ-	I	Encoder Z- diff. input. Leave open for single-ended; Add externally 120Ω to pin 17 for differential
19	USB DM	I/O	USB data-
20	USB DP	I/O	USB data+

J3

Pin	Name	Type	Description
1, 2	Rsvd.	-	Reserved. Do not connect.
3	TML RDY	O	Lit after power-on when the drive initialization ends. Turned off when an error occurs. Active high, LV-TTL.
4	TML ERR	O	Turned on when the drive detects an error condition. Active high, LV-TTL.
5, 6	Rsvd.	-	Reserved. Do not connect.

AxisID selection

AxisID register

MSB								LSB
Bit 8	Bit 7	Bit 6	Bit 5	Bit 4	Bit 3	Bit 2	Bit 1	Bit 0
ID2			ID1			ID0		

Nominal[V]	Minimum[V]	Maximum[V]	IDx* Bits	IDx* Value
0.000	0.00	0.53	**000**	**0**
1.06	0.53	1.41	**001**	**1**
1.76	1.41	2.01	**010**	**2**
2.25	2.01	2.43	**011**	**3**
2.60	2.43	2.75	**100**	**4**
2.89	2.75	3.01	**101**	**5**
3.13	3.01	3.22	**110**	**6**
3.32	3.22	3.30	**111**	**7**

Remarks:

1. *If Bit 7 (ID2) = 1 -> TMLCAN mode is selected*
2. *If Bit 7 (ID2) = 0 -> CANopen mode is selected*
3. *Bit 8 (MSB of ID2) is ignored, and always considered as "0"*
4. *The maximum AxisID value is 127 (Bit 0 … Bit 6)*
5. *TMLCAN mode: AxisID = (64*ID2_Value - 128) + (8*ID1_Value) + ID0_Value*
6. *CANopen mode: AxisID = (64*ID2_Value) + (8*ID1_Value) + ID0_Value*
7. *If all "IDx" pins are left not connected or connected to GND, the AxisID value is 255 and CANopen mode is selected. In this case, the drive will be in "LSS inactive" state and the Green LED will flash at 1 second intervals*

** where "x" can be 0, 1 or 2*

3.9.8 Pinouts for Micro 4804 LZ-CAT

Micro 4804 LZ-CAT

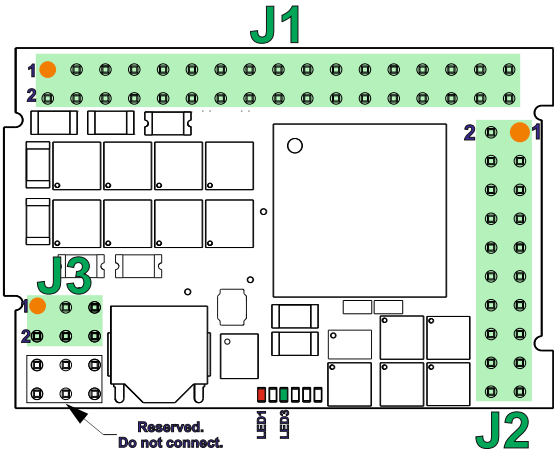

Pins facing downwards view

J1

Pin	Name	Type	Description
1	+Vlog	I	Positive terminal of the logic supply input: 6 to 48 V_{DC}
2	A/A+	O	Phase A for 3-ph motors, A+ for 2-ph steppers, Motor+ for DC brush motors
3	GND	-	Ground return for logic supply
4	B/A-	O	Phase B for 3-ph motors, A- for 2-ph steppers, Motor- for DC brush motors
5	GND	-	Ground return for motor supply & shield for motor windings cable
6	C/B+	O	Phase C for 3-ph motors, B+ for 2-ph steppers
7	+Vmot	I	Positive terminal of the motor supply: 7 to 48 VDC
8	Cr/B-	O	Chopping resistor / Phase B- for 2-ph steppers
9	BFS	I	Boot Fail-Safe: Connect to GND to reprogram firmware in the improbable case when a power loss occurs during a firmware update and the normal firmware recovery fails
10	ID2	I	AxisID2 selection pin. See AxisID register settings table.
11	TX1-	I/O	Transmit/Receive negative, OUT port. Connect to magnetics PHY TX1 or directly to nearby RX0-
12	RX1-	I/O	Receive/Transmit negative, OUT port. Connect to magnetics PHY RX1 or directly to nearby TX0-
13	TX1+	I/O	Transmit/Receive positive, OUT port. Connect to magnetics PHY TX1 or directly to nearby RX0+
14	RX1+	I/O	Receive/Transmit positive, OUT port. Connect to magnetics PHY RX1 or directly to nearby TX0+
15	GND1*	-	Ground shield & center-tap for ECAT magnetics port 1
16	GND0*	-	Ground shield & center-tap for ECAT magnetics port 0
17	TX0-	I/O	Transmit/Receive negative, IN port. Connect to magnetics PHY TX0 or directly to nearby RX1-
18	RX0-	I/O	Receive/Transmit negative, IN port. Connect to magnetics PHY RX0 or directly to nearby TX1-
19	TX0+	I/O	Transmit/Receive positive, IN port. Connect to magnetics PHY TX0 or directly to nearby RX1+
20	RX0+	I/O	Receive/Transmit positive, IN port. Connect to magnetics PHY RX0 or directly to nearby TX1+
21	ID0	I	AxisID0 selection pin. See AxisID register settings table.
22	ID1	I	AxisID1 selection pin. See AxisID register settings table.
23	232TX	O	RS-232 Data Transmission.
24	232RX	I	RS-232 Data Reception.
25 26	Rsvd.	-	Reserved. Do not use.
27	IN2/LSP	I	5-48V digital NPN input. Positive limit switch input
28	IN3/LSN	I	5-48V digital NPN input. Negative limit switch input
29	IN5/Enable	I	5-48V digital NPN input. Drive Enable input
30	I/O0	I/O	5-48V 1.5A NPN (sink) general-purpose digital programmable input IN0 or output OUT0
31	I/O1	I/O	5-48V 0.1A NPN (sink) general-purpose digital programmable input IN1 or output OUT1
32	I/O4	I/O	5-48V 0.1A NPN (sink) general-purpose digital programmable input IN4 or output OUT4
33	GND	-	Ground return and shield
34	AnalogIn	I	Analog input (range software selectable 0-5V or ±10V)

* GND0, GND1, and all other GND pins are internally connected within the drive. However, it is strongly recommended to reserve GND0 and GND1 exclusively for EtherCAT-related functions, and avoid using them for any other purposes.

J2

Pin	Name	Type	Description
1	+V USB	I	USB 5V detect input
2	GND	-	Ground return for USB
3	Hall1	I	Digital Hall sensor 1
4	Hall2	I	Digital Hall sensor 2
5	Hall3	I	Digital Hall sensor 3
6	GND	-	Ground return and shield
7	+5V	O	Supply for all feedback sensors
8	GND	-	Ground return and shield
9	EncA+/ EncA	I	Encoder A+ diff. input or single-ended input
10	EncA-	I	Encoder A- diff. input. Leave open for single-ended; Add externally 120Ω to pin 9 for differential
11	EncB+/ EncB	I	Encoder B diff. input or single-ended input
12	EncB-	I	Encoder B- diff. input. Leave open for single-ended; Add externally 120Ω to pin 11 for differential
13 … 16	Rsvd.	-	Reserved. Do not use.
17	EncZ+/EncZ	I	Encoder Z+ diff. input or single-ended input
18	EncZ-	I	Encoder Z- diff. input. Leave open for single-ended; Add externally 120Ω to pin 17 for differential
19	USB DM	I/O	USB data-
20	USB DP	I/O	USB data+

J3

Pin	Name	Type	Description
1	ECAT ACT0	O	Shows the state of the physical link and activity for ECAT IN port. Active high, LV-TTL.
2	ECAT ACT1	O	Shows the state of the physical link and activity for ECAT OUT port. Active high, LV-TTL.
3	TML RDY	O	Lit after power-on when the drive initialization ends. Turned off when an error occurs. Active high, LV-TTL.
4	TML ERR	O	Turned on when the drive detects an error condition. Active high, LV-TTL.
5	ECAT RUN	O	EtherCAT® RUN indicator. Active high, LV-TTL.
6	ECAT ERR	O	EtherCAT® ERROR indicator. Active high, LV-TTL.

LEDs

No.	Name	Color	Description
LED1	TML ERR	RED	Turned on when the drive detects an error condition.
LED2	ECAT ACT1	YELLOW	Shows the state of the physical link and activity for ECAT OUT port.
LED3	TML RDY	GREEN	Lit after power-on when the drive initialization ends. Turned off when an error occurs.
LED4	ECAT ERR	RED	EtherCAT® ERROR indicator.
LED5	ECAT ACT0	YELLOW	Shows the state of the physical link and activity for ECAT IN port.
LED6	ECAT RUN	GREEN	EtherCAT® RUN indicator.

AxisID selection

AxisID register

MSB								LSB
Bit 8	Bit 7	Bit 6	Bit 5	Bit 4	Bit 3	Bit 2	Bit 1	Bit 0
ID2			ID1			ID0		

Nominal[V]	Minimum[V]	Maximum[V]	IDx* Bits	IDx* Value
0.000	0.00	0.53	000	0
1.06	0.53	1.41	001	1
1.76	1.41	2.01	010	2
2.25	2.01	2.43	011	3
2.60	2.43	2.75	100	4
2.89	2.75	3.01	101	5
3.13	3.01	3.22	110	6
3.32	3.22	3.30	111	7

Remarks:

*1. AxisID = (64*ID2_Value) + (8*ID1_Value) + ID0_Value*

2. If all "IDx" pins are left not connected or connected to GND, the AxisID value is 255 and the EtherCAT register called "configured station alias" will be 0.

3. Bit 8 (MSB of ID2) is ignored, and always considered as "0"

** where "x" can be 0, 1 or 2*

3.9.9 Pinouts for Micro 4803 LZ -CAN

Micro 4803 LZ-CAN

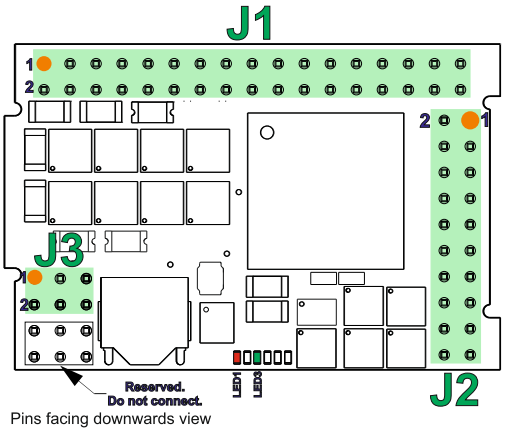

Pins facing downwards view

J1

Pin	Name	Type	Description
1	+Vlog	I	Positive terminal of the logic supply input: 6 to 48 V_{DC}
2	A	O	Phase A for 3-ph motors, Motor+ for DC brush motors
3	GND	-	Ground return for logic supply
4	B	O	Phase B for 3-ph motors, Motor- for DC brush motors
5	GND	-	Ground return for motor supply & shield for motor windings cable
6	C	O	Phase C for 3-ph motors
7	+Vmot	I	Positive terminal of the motor supply: 7 to 48 VDC
8	GND	-	Ground return for logic supply
9	BFS	I	Boot Fail-Safe: Connect to GND to reprogram firmware in the improbable case when a power loss occurs during a firmware update and the normal firmware recovery fails
10	ID2	I	AxisID2 selection pin. See AxisID register settings table.
11 … 14	Rsvd.	-	Reserved. Do not connect.
15	GND	-	Ground return and shield
16	GND	-	Ground return and shield
17 … 20	Rsvd.	-	Reserved. Do not connect.
21	ID0	I	AxisID0 selection pin. See AxisID register settings table.
22	ID1	I	AxisID1 selection pin. See AxisID register settings table.
23	232TX	O	RS-232 Data Transmission.
24	232RX	I	RS-232 Data Reception.
25	CAN Hi	O	CAN-Bus positive line (dominant high)
26	CAN Lo	I	CAN-Bus negative line (dominant low)
27	IN2/LSP	I	5-48V digital NPN input. Positive limit switch input
28	IN3/LSN	I	5-48V digital NPN input. Negative limit switch input
29	IN5/Enable	I	5-48V digital NPN input. Drive Enable input
30	I/O0	I/O	5-48V 1.5A NPN (sink) general-purpose digital programmable input IN0 or output OUT0
31	I/O1	I/O	5-48V 0.1A NPN (sink) general-purpose digital programmable input IN1 or output OUT1
32	I/O4	I/O	5-48V 0.1A NPN (sink) general-purpose digital programmable input IN4 or output OUT4
33	GND	-	Ground return and shield
34	AnalogIn	I	Analog input (range software selectable 0-5V or ±10V)

LEDs

No.	Name	Color	Description
LED1	TML ERR	RED	Turned on when the drive detects an error condition.
LED3	TML RDY	GREEN	Lit after power-on when the drive initialization ends. Turned off when an error occurs.

J2

Pin	Name	Type	Description
1	+V USB	I	USB 5V detect input
2	GND	-	Ground return for USB
3	Hall1	I	Digital Hall sensor 1
4	Hall2	I	Digital Hall sensor 2
5	Hall3	I	Digital Hall sensor 3
6	GND	-	Ground return and shield
7	+5V	O	Supply for all feedback sensors
8	GND	-	Ground return and shield
9	EncA+/ EncA	I	Encoder A+ diff. input or single-ended input
10	EncA-	I	Encoder A- diff. input. Leave open for single-ended; Add externally 120Ω to pin 9 for differential
11	EncB+/ EncB	I	Encoder B diff. input or single-ended input
12	EncB-	I	Encoder B- diff. input. Leave open for single-ended; Add externally 120Ω to pin 11 for differential
13 … 16	Rsvd.	-	Reserved. Do not use.
17	EncZ+/EncZ	I	Encoder Z+ diff. input or single-ended input
18	EncZ-	I	Encoder Z- diff. input. Leave open for single-ended; Add externally 120Ω to pin 17 for differential
19	USB DM	I/O	USB data-
20	USB DP	I/O	USB data+

J3

Pin	Name	Type	Description
1, 2	Rsvd.	-	Reserved. Do not connect.
3	TML RDY	O	Lit after power-on when the drive initialization ends. Turned off when an error occurs. Active high, LV-TTL.
4	TML ERR	O	Turned on when the drive detects an error condition. Active high, LV-TTL.
5, 6	Rsvd.	-	Reserved. Do not connect.

AxisID selection

AxisID register

MSB								LSB
Bit 8	Bit 7	Bit 6	Bit 5	Bit 4	Bit 3	Bit 2	Bit 1	Bit 0
ID2			ID1			ID0		

Nominal[V]	Minimum[V]	Maximum[V]	IDx* Bits	IDx* Value
0.000	0.00	0.53	000	0
1.06	0.53	1.41	001	1
1.76	1.41	2.01	010	2
2.25	2.01	2.43	011	3
2.60	2.43	2.75	100	4
2.89	2.75	3.01	101	5
3.13	3.01	3.22	110	6
3.32	3.22	3.30	111	7

Remarks:

1. *If Bit 7 (ID2) = 1 -> TMLCAN mode is selected*
2. *If Bit 7 (ID2) = 0 -> CANopen mode is selected*
3. *Bit 8 (MSB of ID2) is ignored, and always considered as "0"*
4. *The maximum AxisID value is 127 (Bit 0 … Bit 6)*
5. *TMLCAN mode: AxisID = (64*ID2_Value - 128) + (8*ID1_Value) + ID0_Value*
6. *CANopen mode: AxisID = (64*ID2_Value) + (8*ID1_Value) + ID0_Value*
7. *If all "IDx" pins are left not connected or connected to GND, the AxisID value is 255 and CANopen mode is selected. In this case, the drive will be in "LSS inactive" state and the Green LED will flash at 1 second intervals*

** where "x" can be 0, 1 or 2*

3.9.10 Pinouts for Micro 4803 LZ-CAT

Micro 4803 LZ-CAT

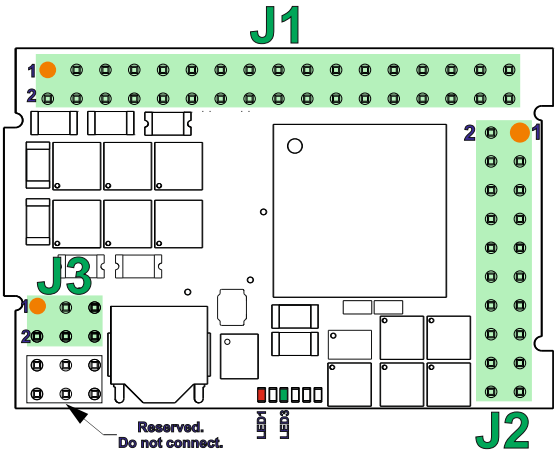

Pins facing downwards view

J1

Pin	Name	Type	Description
1	+Vlog	I	Positive terminal of the logic supply input: 6 to 48 V_{DC}
2	A	O	Phase A for 3-ph motors, Motor+ for DC brush motors
3	GND	-	Ground return for logic supply
4	B	O	Phase B for 3-ph motors, Motor- for DC brush motors
5	GND	-	Ground return for motor supply & shield for motor windings cable
6	C	O	Phase C for 3-ph motors
7	+Vmot	I	Positive terminal of the motor supply: 7 to 48 VDC
8	GND	-	Ground return for logic supply
9	BFS	I	Boot Fail-Safe: Connect to GND to reprogram firmware in the improbable case when a power loss occurs during a firmware update and the normal firmware recovery fails
10	ID2	I	AxisID2 selection pin. See AxisID register settings table.
11	TX1-	I/O	Transmit/Receive negative, OUT port. Connect to magnetics PHY TX1 or directly to nearby RX0-
12	RX1-	I/O	Receive/Transmit negative, OUT port. Connect to magnetics PHY RX1 or directly to nearby TX0-
13	TX1+	I/O	Transmit/Receive positive, OUT port. Connect to magnetics PHY TX1 or directly to nearby RX0+
14	RX1+	I/O	Receive/Transmit positive, OUT port. Connect to magnetics PHY RX1 or directly to nearby TX0+
15	GND1*	-	Ground shield & center-tap for ECAT magnetics port 1
16	GND0*	-	Ground shield & center-tap for ECAT magnetics port 0
17	TX0-	I/O	Transmit/Receive negative, IN port. Connect to magnetics PHY TX0 or directly to nearby RX1-
18	RX0-	I/O	Receive/Transmit negative, IN port. Connect to magnetics PHY RX0 or directly to nearby TX1-
19	TX0+	I/O	Transmit/Receive positive, IN port. Connect to magnetics PHY TX0 or directly to nearby RX1+
20	RX0+	I/O	Receive/Transmit positive, IN port. Connect to magnetics PHY RX0 or directly to nearby TX1+
21	ID0	I	AxisID0 selection pin. See AxisID register settings table.
22	ID1	I	AxisID1 selection pin. See AxisID register settings table.
23	232TX	O	RS-232 Data Transmission.
24	232RX	I	RS-232 Data Reception.
25 26	Rsvd.	-	Reserved. Do not use.
27	IN2/LSP	I	5-48V digital NPN input. Positive limit switch input
28	IN3/LSN	I	5-48V digital NPN input. Negative limit switch input
29	IN5/Enable	I	5-48V digital NPN input. Drive Enable input
30	I/O0	I/O	5-48V 1.5A NPN (sink) general-purpose digital programmable input IN0 or output OUT0
31	I/O1	I/O	5-48V 0.1A NPN (sink) general-purpose digital programmable input IN1 or output OUT1
32	I/O4	I/O	5-48V 0.1A NPN (sink) general-purpose digital programmable input IN4 or output OUT4
33	GND	-	Ground return and shield
34	AnalogIn	I	Analog input (range software selectable 0-5V or ±10V)

* GND0, GND1, and all other GND pins are internally connected within the drive. However, it is strongly recommended to reserve GND0 and GND1 exclusively for EtherCAT-related functions, and avoid using them for any other purposes.

J2

Pin	Name	Type	Description
1	+V USB	I	USB 5V detect input
2	GND	-	Ground return for USB
3	Hall1	I	Digital Hall sensor 1
4	Hall2	I	Digital Hall sensor 2
5	Hall3	I	Digital Hall sensor 3
6	GND	-	Ground return and shield
7	+5V	O	Supply for all feedback sensors
8	GND	-	Ground return and shield
9	EncA+/ EncA	I	Encoder A+ diff. input or single-ended input
10	EncA-	I	Encoder A- diff. input. Leave open for single-ended; Add externally 120Ω to pin 9 for differential
11	EncB+/ EncB	I	Encoder B diff. input or single-ended input
12	EncB-	I	Encoder B- diff. input. Leave open for single-ended; Add externally 120Ω to pin 11 for differential
13 … 16	Rsvd.	-	Reserved. Do not use.
17	EncZ+/EncZ	I	Encoder Z+ diff. input or single-ended input
18	EncZ-	I	Encoder Z- diff. input. Leave open for single-ended; Add externally 120Ω to pin 17 for differential
19	USB DM	I/O	USB data-
20	USB DP	I/O	USB data+

J3

Pin	Name	Type	Description
1	ECAT ACT0	O	Shows the state of the physical link and activity for ECAT IN port. Active high, LV-TTL.
2	ECAT ACT1	O	Shows the state of the physical link and activity for ECAT OUT port. Active high, LV-TTL.
3	TML RDY	O	Lit after power-on when the drive initialization ends. Turned off when an error occurs. Active high, LV-TTL.
4	TML ERR	O	Turned on when the drive detects an error condition. Active high, LV-TTL.
5	ECAT RUN	O	EtherCAT® RUN indicator. Active high, LV-TTL.
6	ECAT ERR	O	EtherCAT® ERROR indicator. Active high, LV-TTL.

LEDs

No.	Name	Color	Description
LED1	TML ERR	RED	Turned on when the drive detects an error condition.
LED2	ECAT ACT1	YELLOW	Shows the state of the physical link and activity for ECAT OUT port.
LED3	TML RDY	GREEN	Lit after power-on when the drive initialization ends. Turned off when an error occurs.
LED4	ECAT ERR	RED	EtherCAT® ERROR indicator.
LED5	ECAT ACT0	YELLOW	Shows the state of the physical link and activity for ECAT IN port.
LED6	ECAT RUN	GREEN	EtherCAT® RUN indicator.

AxisID selection

AxisID register

MSB								LSB
Bit 8	Bit 7	Bit 6	Bit 5	Bit 4	Bit 3	Bit 2	Bit 1	Bit 0
ID2			ID1			ID0		

Nominal[V]	Minimum[V]	Maximum[V]	IDx* Bits	IDx* Value
0.000	0.00	0.53	**000**	**0**
1.06	0.53	1.41	**001**	**1**
1.76	1.41	2.01	**010**	**2**
2.25	2.01	2.43	**011**	**3**
2.60	2.43	2.75	**100**	**4**
2.89	2.75	3.01	**101**	**5**
3.13	3.01	3.22	**110**	**6**
3.32	3.22	3.30	**111**	**7**

Remarks:

*1. AxisID = (64*ID2_Value) + (8*ID1_Value) + ID0_Value*

2. If all "IDx" pins are left not connected or connected to GND, the AxisID value is 255 and the EtherCAT register called "configured station alias" will be 0.

3. Bit 8 (MSB of ID2) is ignored, and always considered as "0"

** where "x" can be 0, 1 or 2*

Micro 4804 CZ-CAN

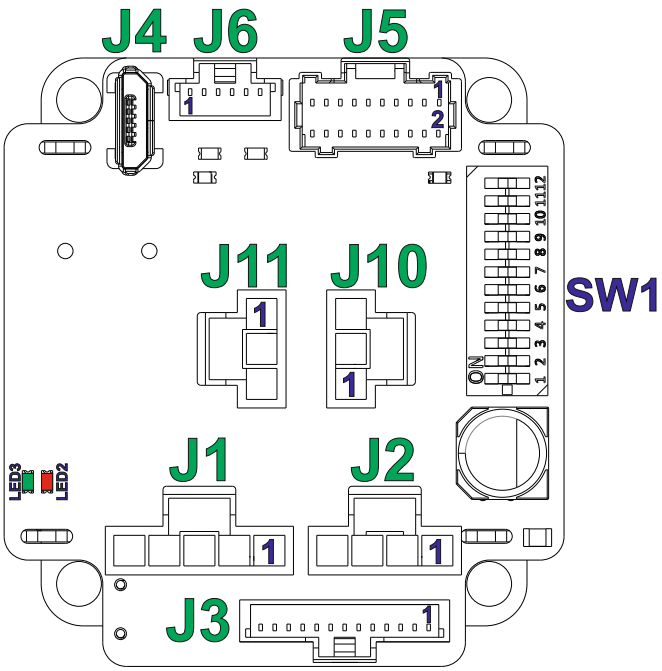

J5

Pin	Name	Type	Description
1	GND	-	Ground return.
2	Hall1 / LH1	I	Digital Hall, or Linear Hall sensor 1.
3	+5V	O	5V supply for all feedback sensors.
4	Hall2 / LH2	I	Digital Hall, or Linear Hall sensor 2.
5	+5V	O	5V supply for all feedback sensors.
6	Hall3 / LH3	I	Digital Hall, or Linear Hall sensor 3.
7	EncA1+/EncA1 Dt1+/Dt1	I	Encoder 1 A+ / Data+ diff. input or single-ended input; set SW1 position 7 for differential.
8	GND	-	Ground return.
9	EncA1-/Dt1-	I	Encoder 1 A-/Data- diff. input.; set SW1 position 7 for differential.
10	+5V	O	5V supply for all feedback sensors.
11	EncB1+/EncB1 Clk1+/Clk1	I	Encoder 1 B+ / Clock+ diff. input or single-ended input; set SW1 position 8 for differential.
12	EncA2+/EncA2 Dt2+/Dt2	I	Incr. encoder 2 A+ / Data+ diff. input or single-ended input; set SW1 position 9 for differential.
13	EncB1-/ Clk1-	I	Encoder 1 B- / Clock- diff. input.; set SW1 position 8 for differential.
14	EncA2-/Dt2-	I	Incr. encoder 2 A- / Data - diff. input; set SW1 position 9 for differential.
15	Z1+	I	Incr. encoder 1 Z / Z+ diff. input or single-ended input; set SW1 position 11 for differential.
16	EncB2+/EncB2 Clk2+/Clk2	I/O	Incr. encoder 2 B+ / Clock+ diff. input or single-ended input; set SW1 position 10 for differential.
17	Z1-	I	Incr. encoder 1 Z- diff. input; set SW1 position 11 for differential.
18	EncB2-/ Clk2-	I	Encoder 2 B- / Clock- diff. input; set SW1 position 10 for differential.
19	GND	-	Ground return.
20	+Vlog	I	Positive terminal of the logic supply: 6 to 48 V_{DC}.

J1

Pin	Name	Type	Description
1	A/A+	O	Phase A for 3-ph motors, A+ for 2-ph steppers, Motor+ for DC brush motors
2	B/A-	O	Phase B for 3-ph motors, A- for 2-ph steppers, Motor- for DC brush motors
3	C/B+	O	Phase C for 3-ph motors, B+ for 2-ph steppers
4	Cr/B-	O	Chopping resistor / Phase B- for 2-ph steppers
5	PE	-	Earth connection

J6

Pin	Name	Type	Description
Reserved. Do not connect.			

J2

Pin	Name	Type	Description
1	+Vmot	I	Positive terminal of the motor supply: 7 to 48 V_{DC}.
2	GND	-	Ground return.
3	+Vlog	I	Positive terminal of the logic supply input: 6 to 48 V_{DC}.
4	PE	-	Earth connection

J10 & J11

Pin	Name	Type	Description
1	GND	-	Ground return.
2	CAN Lo	-	CAN-Bus negative line (dominant low)
3	CAN Hi	-	CAN-Bus positive line (dominant high)

J3

Pin	Name	Type	Description
1	232TX	O	RS-232 Data Transmission.
2	232RX	I	RS-232 Data Reception.
3	GND	-	Ground return.
4	+Vlog	I	Positive terminal of the logic supply input: 6 to 48 V_{DC}.
5	IN2/LSP	I	5-48V digital NPN input. Positive limit switch input.
6	IN3/LSN	I	5-48V digital NPN input. Negative limit switch input.
7	I/O0	I/O	5-48V 1.5A NPN (sink) general-purpose digital programmable input IN0 or output OUT0
8	I/O1	I/O	5-48V 0.1A NPN (sink) general-purpose digital programmable input IN1 or output OUT1
9	I/O4	I/O	5-48V 0.1A NPN (sink) general-purpose digital programmable input IN4 or output OUT4
10	IN5/Enable	I	5-48V digital NPN input. Drive Enable input.
11	GND	-	Ground return.
12	AnalogIn	I	Analog input (range software selectable 0-5V or ±10V)
13	+5V	O	Supply for all feedback sensors.

SW

SW1

AxisID register

MSB				LSB
Bit 4	Bit 3	Bit 2	Bit 1	Bit 0

Position	Description
1	AxisID register Bit 0.
2	AxisID register Bit 1.
3	AxisID register Bit 2.
4	AxisID register Bit 3.
5	AxisID register Bit 4.
6	ON = TMLCAN mode is selected OFF = CANOpen mode is selected
7	ON = Connect an 120Ω resistor between EncA1-/Dt1- and EncA1+/EncA1/Dt1+/Dt1 feedback pins.
8	ON = Connect an 120Ω resistor between EncB1/Clk1- and EncB1+/EncB1/Clk1+/Clk1 feedback pins.
9	ON = Connect an 120Ω resistor between EncA2-/Dt2- and EncA2+/EncA2/Dt2+/Dt2 feedback pins.
10	ON = Connect an 120Ω resistor between EncB2/Clk2- and EncB2+/EncB2/Clk2+/Clk2 feedback pins.
11	ON = Connect an 120Ω resistor between Z1- and Z1+ feedback pins.
12	ON = Connect an 120Ω resistor between CAN Hi and CAN Lo signals.

ON: Bit x = 1.
OFF: Bit x = 0.
The maximum AxisID value is 31.
When all Bits are set to 0, AxisID value is 255.
In CANOpen mode, if the AxisID is set to 255, the drive enters the "LSS inactive" state. In this state, the Green LED will flash at 1-second intervals.

J4

Pin	Name	Type	Description
1	+V USB	I	USB supply.
2	USB DM	I/O	USB data-.
3	USB DP	I/O	USB data+.
4	Rsvd	-	Reserved. Do not connect.
5	GND	-	Ground return.

LEDs

No.	Name	Color	Description
LED2	TML ERR	RED	Turned on when the drive detects an error condition.
LED3	TML RDY	GREEN	Lit after power-on when the drive initialization ends. Turned off when an error occurs.

3.9.1 Pinouts for Micro 4804 CZ-CAT

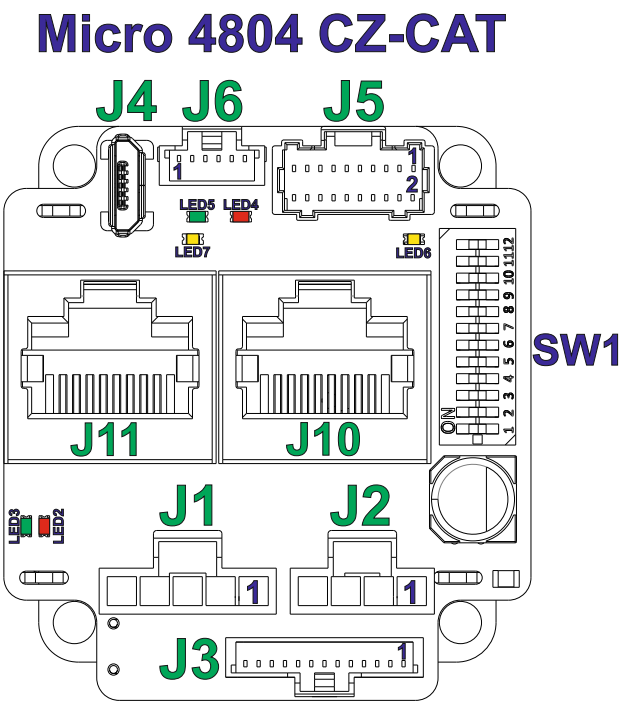

J5

Pin	Name	Type	Description
1	GND	-	Ground return.
2	Hall1 / LH1	I	Digital Hall, or Linear Hall sensor 1.
3	+5V	O	5V supply for all feedback sensors.
4	Hall2 / LH2	I	Digital Hall, or Linear Hall sensor 2.
5	+5V	O	5V supply for all feedback sensors.
6	Hall3 / LH3	I	Digital Hall, or Linear Hall sensor 3.
7	EncA1+/EncA1 Dt1+/Dt1	I	Encoder 1 A+ / Data+ diff. input or single-ended input; set SW1 position 7 for differential.
8	GND	-	Ground return.
9	EncA1-/Dt1-	I	Encoder 1 A-/Data- diff. input.; set SW1 position 7 for differential.
10	+5V	O	5V supply for all feedback sensors.
11	EncB1+/EncB1 Clk1+/Clk1	I	Encoder 1 B+ / Clock+ diff. input or single-ended input; set SW1 position 8 for differential.
12	EncA2+/EncA2 Dt2+/Dt2	I	Incr. encoder 2 A+ / Data+ diff. input or single-ended input; set SW1 position 9 for differential.
13	EncB1-/ Clk1-	I	Encoder 1 B- / Clock- diff. input.; set SW1 position 8 for differential.
14	EncA2-/Dt2-	I	Incr. encoder 2 A- / Data - diff. input; set SW1 position 9 for differential.
15	Z1+	I	Incr. encoder 1 Z / Z+ diff. input or single-ended input; set SW1 position 11 for differential.
16	EncB2+/EncB2 Clk2+/Clk2	I/O	Incr. encoder 2 B+ / Clock+ diff. input or single-ended input; set SW1 position 10 for differential.
17	Z1-	I	Incr. encoder 1 Z- diff. input; set SW1 position 11 for differential.
18	EncB2-/ Clk2-	I	Encoder 2 B- / Clock- diff. input; set SW1 position 10 for differential.
19	GND	-	Ground return.
20	+Vlog	I	Positive terminal of the logic supply: 6 to 48 V_{DC}.

J1

Pin	Name	Type	Description
1	A/A+	O	Phase A for 3-ph motors, A+ for 2-ph steppers, Motor+ for DC brush motors
2	B/A-	O	Phase B for 3-ph motors, A- for 2-ph steppers, Motor- for DC brush motors
3	C/B+	O	Phase C for 3-ph motors, B+ for 2-ph steppers
4	Cr/B-	O	Chopping resistor / Phase B- for 2-ph steppers
5	PE	-	Earth connection

J6

Pin	Name	Type	Description
Reserved. Do not connect.			

J10 & J11

Port	Name	Type	Description
J10	ECAT IN	I	EtherCAT standard RJ45 Ethernet IN port.
J11	ECAT OUT	O	EtherCAT standard RJ45 Ethernet OUT port.

J2

Pin	Name	Type	Description
1	+Vmot	I	Positive terminal of the motor supply: 7 to 48 V_{DC}.
2	GND	-	Ground return.
3	+Vlog	I	Positive terminal of the logic supply input: 6 to 48 V_{DC}.
4	PE	-	Earth connection

SW

SW1

AxisID register

MSB					LSB
Bit 7	Bit 4	Bit 3	Bit 2	Bit 1	Bit 0

Position	Description
1	AxisID register Bit 0.
2	AxisID register Bit 1.
3	AxisID register Bit 2.
4	AxisID register Bit 3.
5	AxisID register Bit 4.
6	AxisID register Bit 7.
7	ON = Connect an 120Ω resistor between EncA1-/Dt1- and EncA1+/EncA1/Dt1+/Dt1 feedback pins.
8	ON = Connect an 120Ω resistor between EncB1/Clk1- and EncB1+/EncB1/Clk1+/Clk1 feedback pins.
9	ON = Connect an 120Ω resistor between EncA2-/Dt2- and EncA2+/EncA2/Dt2+/Dt2 feedback pins.
10	ON = Connect an 120Ω resistor between EncB2/Clk2- and EncB2+/EncB2/Clk2+/Clk2 feedback pins.
11	ON = Connect an 120Ω resistor between Z1- and Z1+ feedback pins.
12	ON = Connect an 120Ω resistor between CAN Hi and CAN Lo signals.

ON: Bit x = 1.
OFF: Bit x = 0.
Possible AxisID values: 1÷31 and 128÷159. When all Bits are set to 0, AxisID value is 255. When the AxisID value is 255, the EtherCAT register called "configured station alias" will be 0

J3

Pin	Name	Type	Description
1	232TX	O	RS-232 Data Transmission.
2	232RX	I	RS-232 Data Reception.
3	GND	-	Ground return.
4	+Vlog	I	Positive terminal of the logic supply input: 6 to 48 V_{DC}.
5	IN2/LSP	I	5-48V digital NPN input. Positive limit switch input.
6	IN3/LSN	I	5-48V digital NPN input. Negative limit switch input.
7	I/O0	I/O	5-48V 1.5A NPN (sink) general-purpose digital programmable input IN0 or output OUT0
8	I/O1	I/O	5-48V 0.1A NPN (sink) general-purpose digital programmable input IN1 or output OUT1
9	I/O4	I/O	5-48V 0.1A NPN (sink) general-purpose digital programmable input IN4 or output OUT4
10	IN5/Enable	I	5-48V digital NPN input. Drive Enable input.
11	GND	-	Ground return.
12	AnalogIn	I	Analog input (range software selectable 0-5V or ±10V)
13	+5V	O	Supply for all feedback sensors.

LEDs

No.	Name	Color	Description
LED2	TML ERR	RED	Turned on when the drive detects an error condition.
LED3	TML RDY	GREEN	Lit after power-on when the drive initialization ends. Turned off when an error occurs.
LED4	ECAT ERR	RED	EtherCAT® ERROR indicator.
LED5	ECAT RUN	GREEN	EtherCAT® RUN indicator.
LED6	ECAT ACT0	YELLOW	Shows the state of the physical link and activity for ECAT IN and OUT ports.

J4

Pin	Name	Type	Description
1	+V USB	I	USB supply.
2	USB DM	I/O	USB data-.
3	USB DP	I/O	USB data+.
4	Rsvd	-	Reserved. Do not connect.
5	GND	-	Ground return.

3.9.1 Pinouts for Micro 4804 CZ-CAN-STO

Micro 4804 CZ-CAN-STO

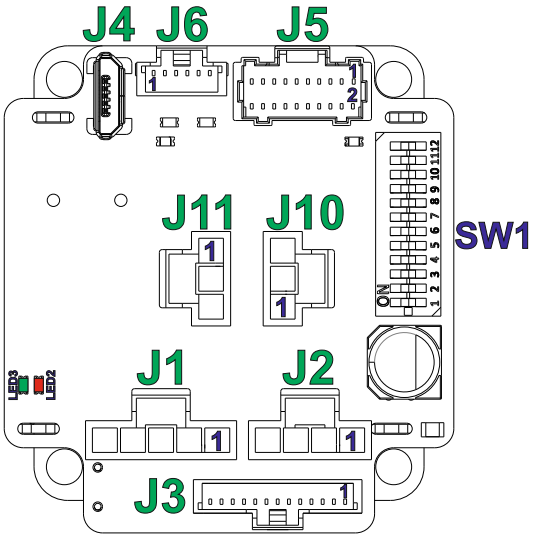

J1

Pin	Name	Type	Description
1	A/A+	O	Phase A for 3-ph motors, A+ for 2-ph steppers, Motor+ for DC brush motors
2	B/A-	O	Phase B for 3-ph motors, A- for 2-ph steppers, Motor- for DC brush motors
3	C/B+	O	Phase C for 3-ph motors, B+ for 2-ph steppers
4	Cr/B-	O	Chopping resistor / Phase B- for 2-ph steppers
5	PE	-	Earth connection

J2

Pin	Name	Type	Description
1	+Vmot	I	Positive terminal of the motor supply: 7 to 48 V_{DC}.
2	GND	-	Ground return.
3	+Vlog	I	Positive terminal of the logic supply input: 6 to 48 V_{DC}.
4	PE	-	Earth connection

J3

Pin	Name	Type	Description
1	232TX	O	RS-232 Data Transmission.
2	232RX	I	RS-232 Data Reception.
3	GND	-	Ground return.
4	+Vlog	I	Positive terminal of the logic supply input: 6 to 48 V_{DC}.
5	IN2/LSP	I	5-48V digital NPN input. Positive limit switch input.
6	IN3/LSN	I	5-48V digital NPN input. Negative limit switch input.
7	I/O0	I/O	5-48V 1.5A NPN (sink) general-purpose digital programmable input IN0 or output OUT0
8	I/O1	I/O	5-48V 0.1A NPN (sink) general-purpose digital programmable input IN1 or output OUT1
9	I/O4	I/O	5-48V 0.1A NPN (sink) general-purpose digital programmable input IN4 or output OUT4
10	IN5/Enable	I	5-48V digital NPN input. Drive Enable input.
11	GND	-	Ground return.
12	AnalogIn	I	Analog input (range software selectable 0-5V or ±10V)
13	+5V	O	Supply for all feedback sensors.

J4

Pin	Name	Type	Description
1	+V USB	I	USB supply.
2	USB DM	I/O	USB data-.
3	USB DP	I/O	USB data+.
4	Rsvd	-	Reserved. Do not connect.
5	GND	-	Ground return.

LEDs

No.	Name	Color	Description
LED2	TML ERR	RED	Turned on when the drive detects an error condition.
LED3	TML RDY	GREEN	Lit after power-on when the drive initialization ends. Turned off when an error occurs.

J5

Pin	Name	Type	Description
1	GND	-	Ground return.
2	Hall1 / LH1	I	Digital Hall, or Linear Hall sensor 1.
3	+5V	O	5V supply for all feedback sensors.
4	Hall2 / LH2	I	Digital Hall, or Linear Hall sensor 2.
5	+5V	O	5V supply for all feedback sensors.
6	Hall3 / LH3	I	Digital Hall, or Linear Hall sensor 3.
7	EncA1+/EncA1 Dt1+/Dt1	I	Encoder 1 A+ / Data+ diff. input or single-ended input; set SW1 position 7 for differential.
8	GND	-	Ground return.
9	EncA1-/Dt1-	I	Encoder 1 A-/Data- diff. input.; set SW1 position 7 for differential.
10	+5V	O	5V supply for all feedback sensors.
11	EncB1+/EncB1 Clk1+/Clk1	I	Encoder 1 B+ / Clock+ diff. input or single-ended input; set SW1 position 8 for differential.
12	EncA2+/EncA2 Dt2+/Dt2	I	Incr. encoder 2 A+ / Data+ diff. input or single-ended input; set SW1 position 9 for differential.
13	EncB1-/ Clk1-	I	Encoder 1 B- / Clock- diff. input.; set SW1 position 8 for differential.
14	EncA2-/Dt2-	I	Incr. encoder 2 A- / Data - diff. input; set SW1 position 9 for differential.
15	Z1+	I	Incr. encoder 1 Z / Z+ diff. input or single-ended input; set SW1 position 11 for differential.
16	EncB2+/EncB2 Clk2+/Clk2	I/O	Incr. encoder 2 B+ / Clock+ diff. input or single-ended input; set SW1 position 10 for differential.
17	Z1-	I	Incr. encoder 1 Z- diff. input; set SW1 position 11 for differential.
18	EncB2-/ Clk2-	I	Encoder 2 B- / Clock- diff. input; set SW1 position 10 for differential.
19	GND	-	Ground return.
20	+Vlog	I	Positive terminal of the logic supply: 6 to 48 V_{DC}.

J10 & J11

Pin	Name	Type	Description
1	GND	-	Ground return.
2	CAN Lo	-	CAN-Bus negative line (dominant low)
3	CAN Hi	-	CAN-Bus positive line (dominant high)

J6

Pin	Name	Type	Description	
1	STO2-	I	Safe Torque Off input 2, negative return - (opto isolated, 0V)	Apply between both STO1+, STO2+ and STO1 , STO2- 24V DC from SELV/ PELV power supply for motor PWM output operation
2	STO2+	I	Safe Torque Off input 2, positive input (opto-isolated, 18÷40V)	
3	PE	-	Earth connection	
4				
5	STO1+	I	Safe Torque Off input 1, positive input (opto-isolated, 18÷40V)	Apply between both STO1+, STO2+ and STO1 , STO2- 24V DC from SELV/ PELV power supply for motor PWM output operation
6	STO1-	I	Safe Torque Off input 1, negative return - (opto isolated, 0V)	

SW

SW1

AxisID register

MSB				LSB
Bit 4	Bit 3	Bit 2	Bit 1	Bit 0

Position	Description
1	AxisID register Bit 0.
2	AxisID register Bit 1.
3	AxisID register Bit 2.
4	AxisID register Bit 3.
5	AxisID register Bit 4.
6	ON = TMLCAN mode is selected OFF = CANOpen mode is selected
7	ON = Connect an 120Ω resistor between EncA1-/Dt1- and EncA1+/EncA1/Dt1+/Dt1 feedback pins.
8	ON = Connect an 120Ω resistor between EncB1/Clk1- and EncB1+/EncB1/Clk1+/Clk1 feedback pins.
9	ON = Connect an 120Ω resistor between EncA2-/Dt2- and EncA2+/EncA2/Dt2+/Dt2 feedback pins.
10	ON = Connect an 120Ω resistor between EncB2/Clk2- and EncB2+/EncB2/Clk2+/Clk2 feedback pins.
11	ON = Connect an 120Ω resistor between Z1- and Z1+ feedback pins.
12	ON = Connect an 120Ω resistor between CAN Hi and CAN Lo signals.

ON: Bit x = 1.
OFF: Bit x = 0.
The maximum AxisID value is 31.
When all Bits are set to 0, AxisID value is 255.
In CANOpen mode, if the AxisID is set to 255, the drive enters the "LSS inactive" state. In this state, the Green LED will flash at 1-second intervals.

Micro 4804 CZ-CAT-STO

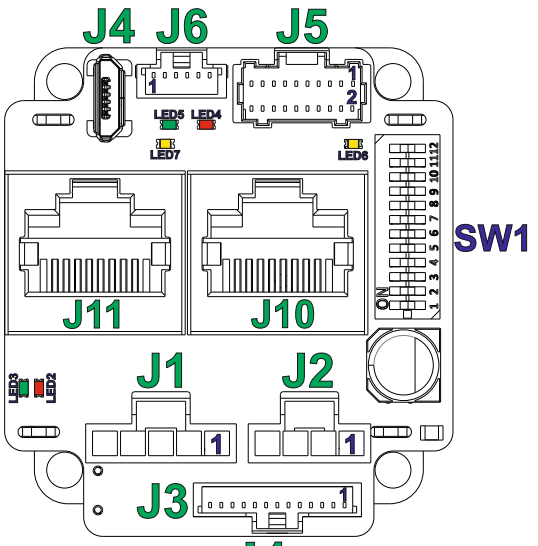

J1

Pin	Name	Type	Description
1	A/A+	O	Phase A for 3-ph motors, A+ for 2-ph steppers, Motor+ for DC brush motors
2	B/A-	O	Phase B for 3-ph motors, A- for 2-ph steppers, Motor- for DC brush motors
3	C/B+	O	Phase C for 3-ph motors, B+ for 2-ph steppers
4	Cr/B-	O	Chopping resistor / Phase B- for 2-ph steppers
5	PE	-	Earth connection

J2

Pin	Name	Type	Description
1	+Vmot	I	Positive terminal of the motor supply: 7 to 48 V_{DC}.
2	GND	-	Ground return.
3	+Vlog	I	Positive terminal of the logic supply input: 6 to 48 V_{DC}.
4	PE	-	Earth connection

J3

Pin	Name	Type	Description
1	232TX	O	RS-232 Data Transmission.
2	232RX	I	RS-232 Data Reception.
3	GND	-	Ground return.
4	+Vlog	I	Positive terminal of the logic supply input: 6 to 48 V_{DC}.
5	IN2/LSP	I	5-48V digital NPN input. Positive limit switch input.
6	IN3/LSN	I	5-48V digital NPN input. Negative limit switch input.
7	I/O0	I/O	5-48V 1.5A NPN (sink) general-purpose digital programmable input IN0 or output OUT0
8	I/O1	I/O	5-48V 0.1A NPN (sink) general-purpose digital programmable input IN1 or output OUT1
9	I/O4	I/O	5-48V 0.1A NPN (sink) general-purpose digital programmable input IN4 or output OUT4
10	IN5/Enable	I	5-48V digital NPN input. Drive Enable input.
11	GND	-	Ground return.
12	AnalogIn	I	Analog input (range software selectable 0-5V or ±10V)
13	+5V	O	Supply for all feedback sensors.

J4

Pin	Name	Type	Description
1	+V USB	I	USB supply.
2	USB DM	I/O	USB data-.
3	USB DP	I/O	USB data+.
4	Rsvd	-	Reserved. Do not connect.
5	GND	-	Ground return.

LEDs

No.	Name	Color	Description
LED2	TML ERR	RED	Turned on when the drive detects an error condition.
LED3	TML RDY	GREEN	Lit after power-on when the drive initialization ends. Turned off when an error occurs.
LED4	ECAT ERR	RED	EtherCAT® ERROR indicator.
LED5	ECAT RUN	GREEN	EtherCAT® RUN indicator.
LED6	ECAT ACT0	YELLOW	Shows the state of the physical link and activity for ECAT IN and OUT ports.

J5

Pin	Name	Type	Description
1	GND	-	Ground return.
2	Hall1 / LH1	I	Digital Hall, or Linear Hall sensor 1.
3	+5V	O	5V supply for all feedback sensors.
4	Hall2 / LH2	I	Digital Hall, or Linear Hall sensor 2.
5	+5V	O	5V supply for all feedback sensors.
6	Hall3 / LH3	I	Digital Hall, or Linear Hall sensor 3.
7	EncA1+/EncA1 Dt1+/Dt1	I	Encoder 1 A+ / Data+ diff. input or single-ended input; set SW1 position 7 for differential.
8	GND	-	Ground return.
9	EncA1-/Dt1-	I	Encoder 1 A-/Data- diff. input.; set SW1 position 7 for differential.
10	+5V	O	5V supply for all feedback sensors.
11	EncB1+/EncB1 Clk1+/Clk1	I	Encoder 1 B+ / Clock+ diff. input or single-ended input; set SW1 position 8 for differential.
12	EncA2+/EncA2 Dt2+/Dt2	I	Incr. encoder 2 A+ / Data+ diff. input or single-ended input; set SW1 position 9 for differential.
13	EncB1-/ Clk1-	I	Encoder 1 B- / Clock- diff. input.; set SW1 position 8 for differential.
14	EncA2-/Dt2-	I	Incr. encoder 2 A- / Data - diff. input; set SW1 position 9 for differential.
15	Z1+	I	Incr. encoder 1 Z / Z+ diff. input or single-ended input; set SW1 position 11 for differential.
16	EncB2+/EncB2 Clk2+/Clk2	I/O	Incr. encoder 2 B+ / Clock+ diff. input or single-ended input; set SW1 position 10 for differential.
17	Z1-	I	Incr. encoder 1 Z- diff. input; set SW1 position 11 for differential.
18	EncB2-/ Clk2-	I	Encoder 2 B- / Clock- diff. input; set SW1 position 10 for differential.
19	GND	-	Ground return.
20	+Vlog	I	Positive terminal of the logic supply: 6 to 48 V_{DC}.

J6

Pin	Name	Type	Description	
1	STO2-	I	Safe Torque Off input 2, negative return - (opto isolated, 0V)	Apply between both STO1+, STO2+ and STO4 , STO2- 24V DC from SELV/ PELV power supply for motor PWM output operation
2	STO2+	I	Safe Torque Off input 2, positive input (opto-isolated, 18÷40V)	
3	PE	-	Earth connection	
4				
5	STO1+	I	Safe Torque Off input 1, positive input (opto-isolated, 18÷40V)	Apply between both STO1+, STO2+ and STO4 , STO2- 24V DC from SELV/ PELV power supply for motor PWM output operation
6	STO1-	I	Safe Torque Off input 1, negative return - (opto isolated, 0V)	

J10 & J11

Port	Name	Type	Description
J10	ECAT IN	I	EtherCAT standard RJ45 Ethernet IN port.
J11	ECAT OUT	O	EtherCAT standard RJ45 Ethernet OUT port.

SW

SW1

AxisID register

MSB					LSB
Bit 7	Bit 4	Bit 3	Bit 2	Bit 1	Bit 0

Position	Description	
1	AxisID register Bit 0.	**ON**: Bit x = 1. **OFF**: Bit x = 0. *Possible AxisID values: 1÷31 and 128÷159. When all Bits are set to 0, AxisID value is 255. When the AxisID value is 255, the EtherCAT register called "configured station alias" will be 0*
2	AxisID register Bit 1.	
3	AxisID register Bit 2.	
4	AxisID register Bit 3.	
5	AxisID register Bit 4.	
6	AxisID register Bit 7.	
7	ON = Connect an 120Ω resistor between EncA1-/Dt1- and EncA1+/EncA1/Dt1+/Dt1 feedback pins.	
8	ON = Connect an 120Ω resistor between EncB1/Clk1- and EncB1+/EncB1/Clk1+/Clk1 feedback pins.	
9	ON = Connect an 120Ω resistor between EncA2-/Dt2- and EncA2+/EncA2/Dt2+/Dt2 feedback pins.	
10	ON = Connect an 120Ω resistor between EncB2/Clk2- and EncB2+/EncB2/Clk2+/Clk2 feedback pins.	
11	ON = Connect an 120Ω resistor between Z1- and Z1+ feedback pins.	
12	ON = Connect an 120Ω resistor between CAN Hi and CAN Lo signals.	

3.9.1 Mating Connectors for Micro MZ/PZ/LZ

Producer	Part No.	Connector	Description	
Samtec	SQW-117-01-F-D(-VS)	J1	2x17, 2.0mm THT (SMD) socket	
	CLT-117-02-F-D		2x17, 2.0mm SMD pass-through socket	
	SQW-110-01-F-D(-VS)	J2	2x10, 2.0mm THT (SMD) socket	
	CLT-110-02-F-D		2x10, 2.0mm SMD pass-through socket	
	SQW-103-01-F-D(-VS)	J3	2x3, 2.0mm THT (SMD) socket	
	CLT-103-02-F-D		2x3, 2.0mm SMD pass-through socket	
	SQW-102-01-F-D(-VS)	J4[1]	2x2, 2.0mm THT (SMD) socket	
	CLT-102-02-F-D		2x2, 2.0mm SMD pass-through socket	

3.9.2 Mating Connectors for Micro 4804 CZ

Image	Connector	Description	Manufacturer	Part Number	Image
	J1	1x5 Nano-Fit, 2.50mm Pitch Nano-Fit Wire-to-Board Housing, 5 circuits	Molex	1053071205	
	J2	1x4 Nano-Fit, 2.50mm Pitch Nano-Fit Wire-to-Board Housing, 4 circuits	Molex	1053071204	
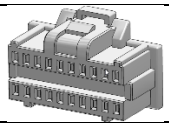	J5	2x10 Pico-Clasp, 1.00mm Pitch Pico-Clasp Wire-to-Board Housing, 20 Circuits	Molex	5011892010	
	J3	1x13 Pico-Clasp, 1.00mm Pitch Pico-Clasp Wire-to-Board Housing, 13 Circuits	Molex	5013301300	
	J6	1x6 Pico-Clasp, 1.00mm Pitch Pico-Clasp Wire-to-Board Housing, 6 Circuits	Molex	5013300600	
	J4	USB cable, Cable USB A Male - Micro B Male, 1m, shielded, black, 9.6mm plastic width	Tensility International Corp	1002333	
	J1, J2	Pre-Crimped wires for Nano-Fit: Cable Assembly, Nano-Fit Crimp Terminal Socket to Nano-Fit Crimp Terminal Socket, 300mm	Molex	0797582140	
	J3, J5, J6	Pre-Crimped wires for Pico-Clasp: Cable Assembly, Pico-Clasp Crimp Terminal Socket to Pico-Clasp Crimp Terminal Socket, 300mm	Molex	0797581019	
	J1, J2	Pins for Nano-Fit: Nano-Fit Crimp Terminal, Female, 0.76µm Gold (Au) Plating, Lubricated, 24-26 AWG	Molex	1053001400	
	J3, J5, J6	Pins for Pico-Clasp: 1.00mm Pitch, Pico-Clasp Female Crimp Terminal, Gold Plating 0.10µm, 28-32 AWG, Reel	Molex	5011937000	
	J1, J2	Crimp tool Nano Fit: Crimp Tool, Ratchet, Molex Nano-Fit 105300 Series 26-24AWG Socket Contacts, 207129 Series	Molex	638276000	
	J3, J5, J6	Crimp tool Pico-Clasp: Crimp Tool, Ratchet, Molex Pico-Clasp 501193 & 501334 Series 32-28AWG Contacts	Molex	638191500	

3.9.1 Cable sets

To simplify the evaluation of the Micro 4804 CZ, a complete cable set is available. Please refer to the following part numbers when placing orders:

Part Number	Description
P038.021.C008	CCS Micro 4804 CZ-CAT (Complete cable set 100 cm)
P038.021.C009	CCS Micro 4804 CZ-CAN (Complete cable set 100 cm)

[1] Connector needed only for the STO executions.

3.10 Connection diagrams

3.10.1 Micro 4804 MZ-CAN, Micro 4804 PZ-CAN and Micro 4803 MZ-CAN connection diagram

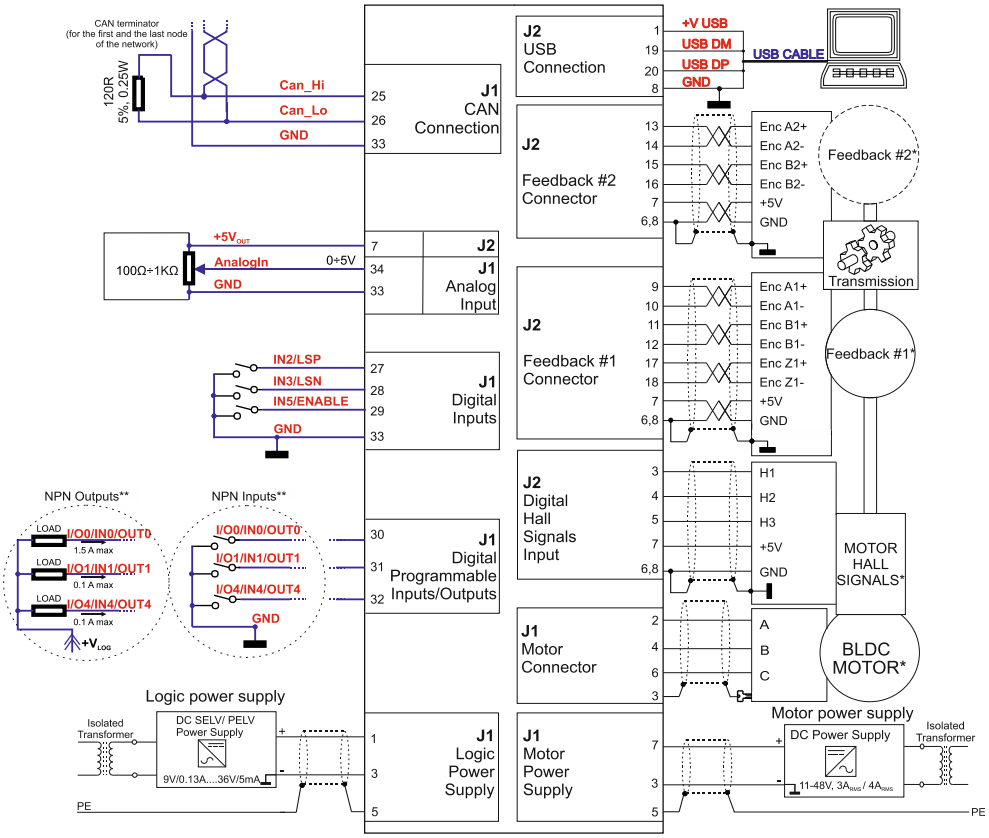

3.10.2 Micro 4804 MZ-CAT, Micro 4804 PZ-CAT and Micro 4803 MZ-CAT connection diagram

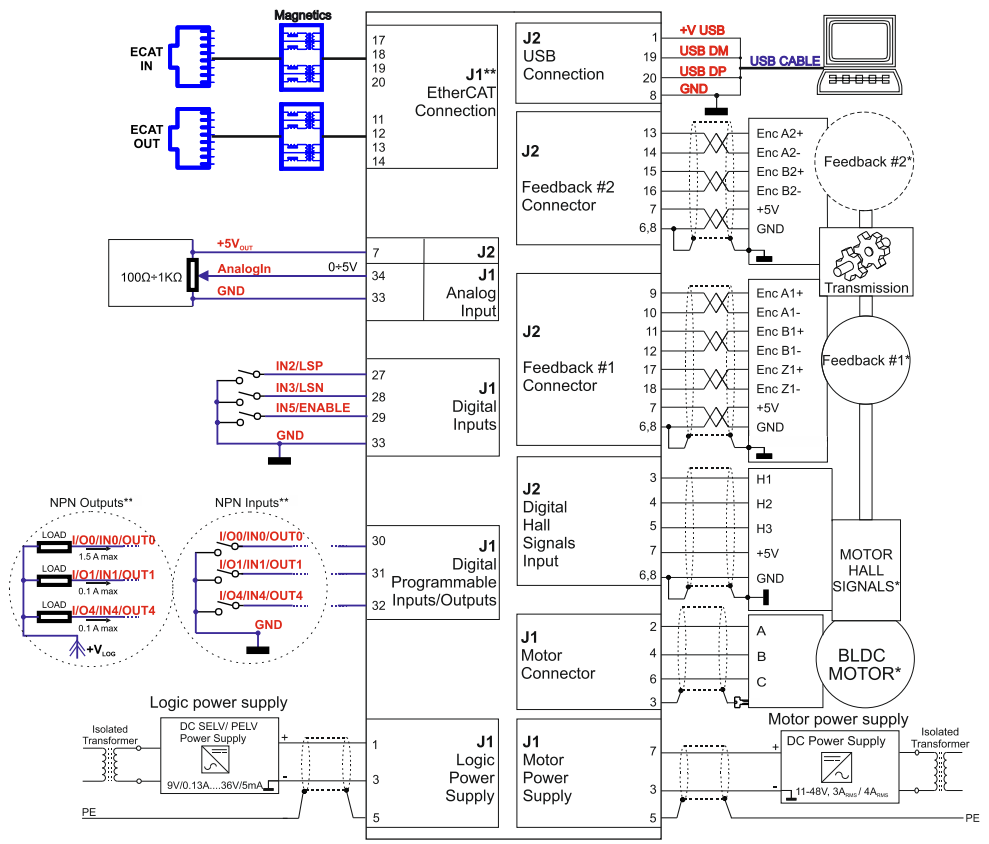

* For other available feedback / motor options, check the detailed diagrams below
** Pins are software selectable individually as NPN inputs/outputs

3.10.3 Micro 4804 MZ-CAN-STO and PZ-CAN-STO connection diagram

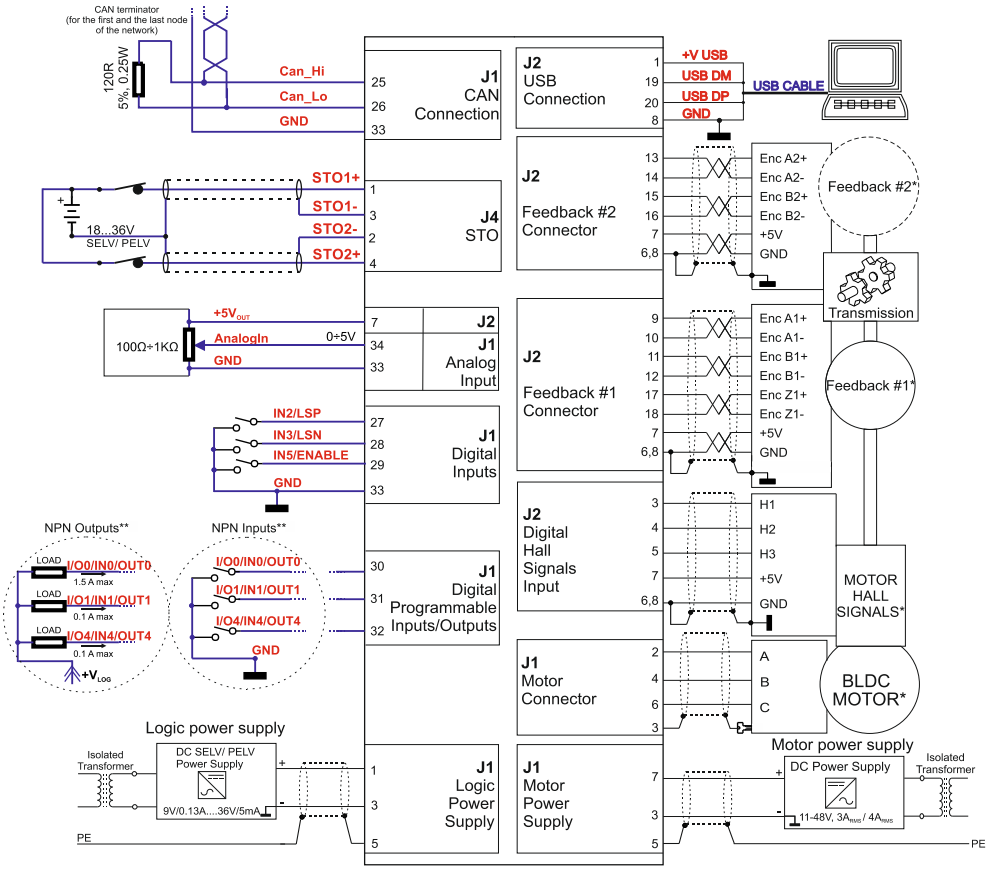

3.10.4 Micro 4804 MZ-CAT-STO and PZ-CAT-STO connection diagram

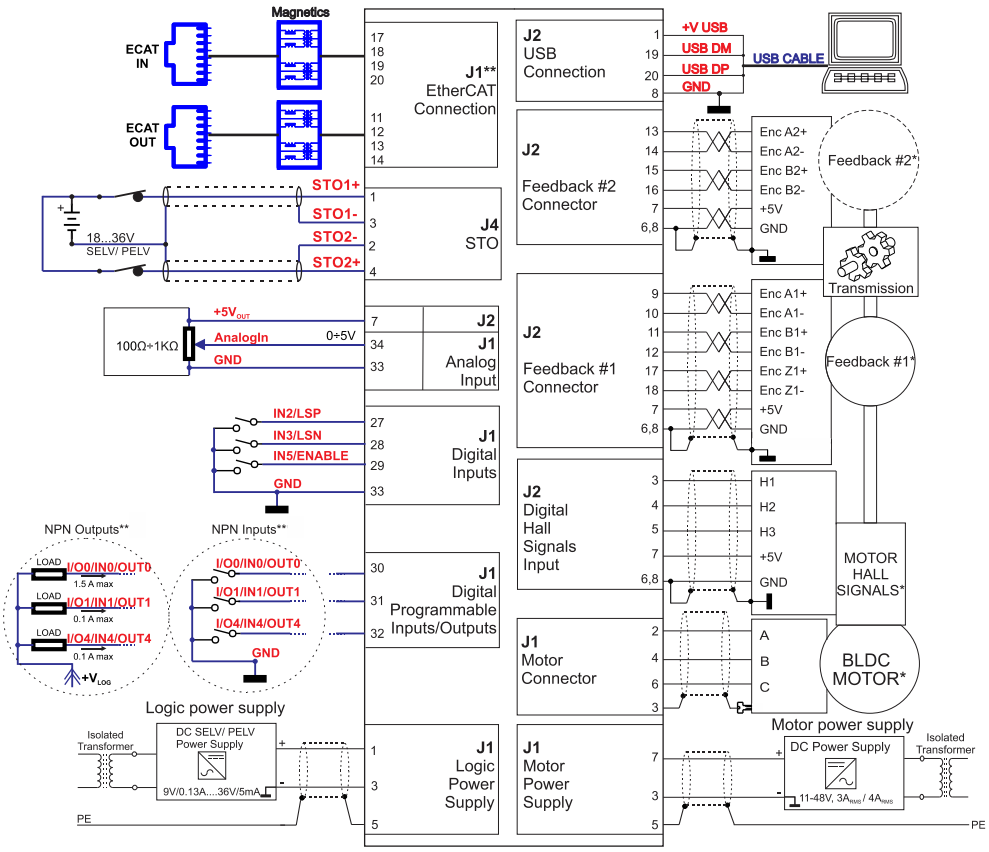

* For other available feedback / motor options, check the detailed diagrams below
** Pins are software selectable individually as NPN inputs/outputs

3.10.5 Micro 4804 LZ-CAN and Micro 4803 LZ-CAN connection diagram

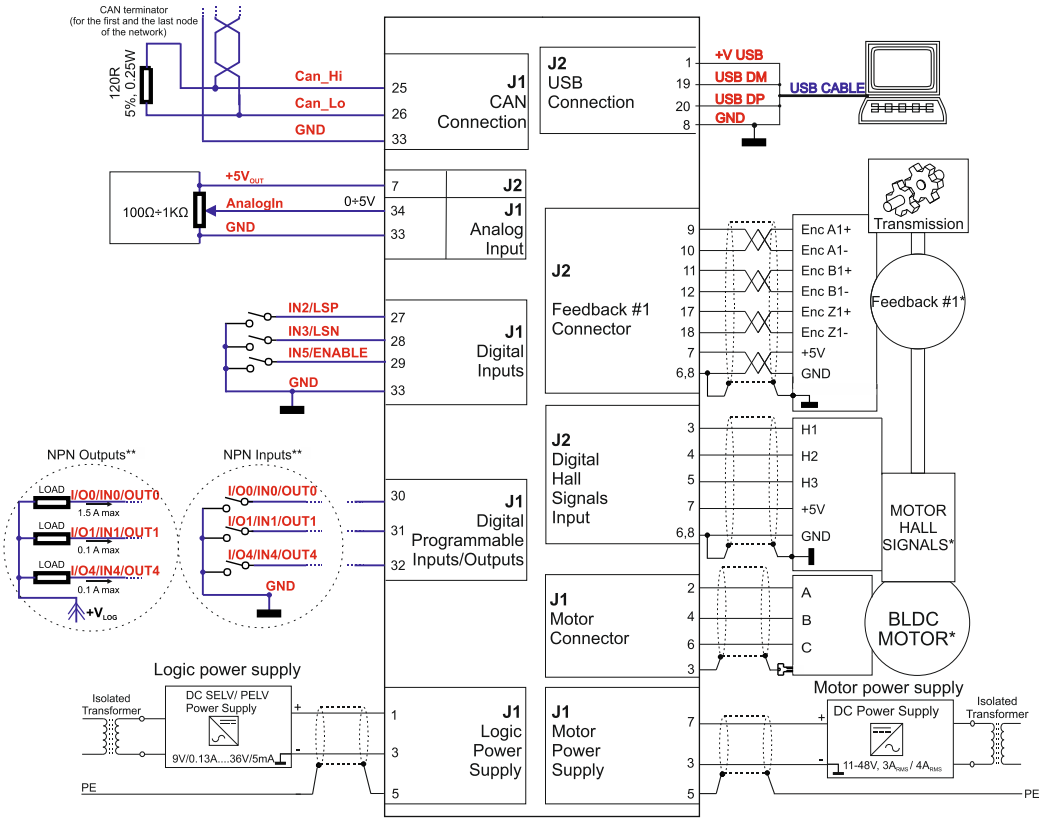

3.10.6 Micro 4804 LZ-CAT and Micro 4803 LZ-CAT connection diagram

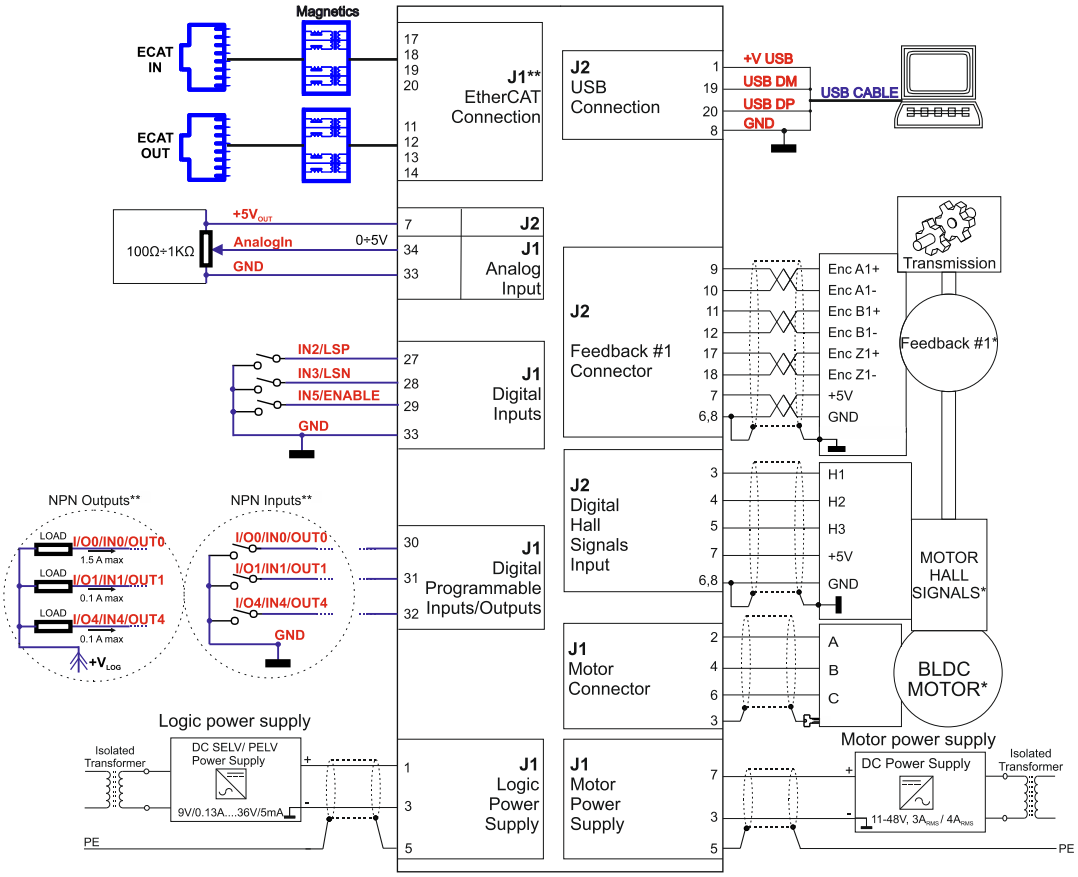

* For other available feedback / motor options, check the detailed diagrams below
** Pins are software selectable individually as NPN inputs/outputs

3.10.7 Micro 4804 CZ-CAN connection diagram

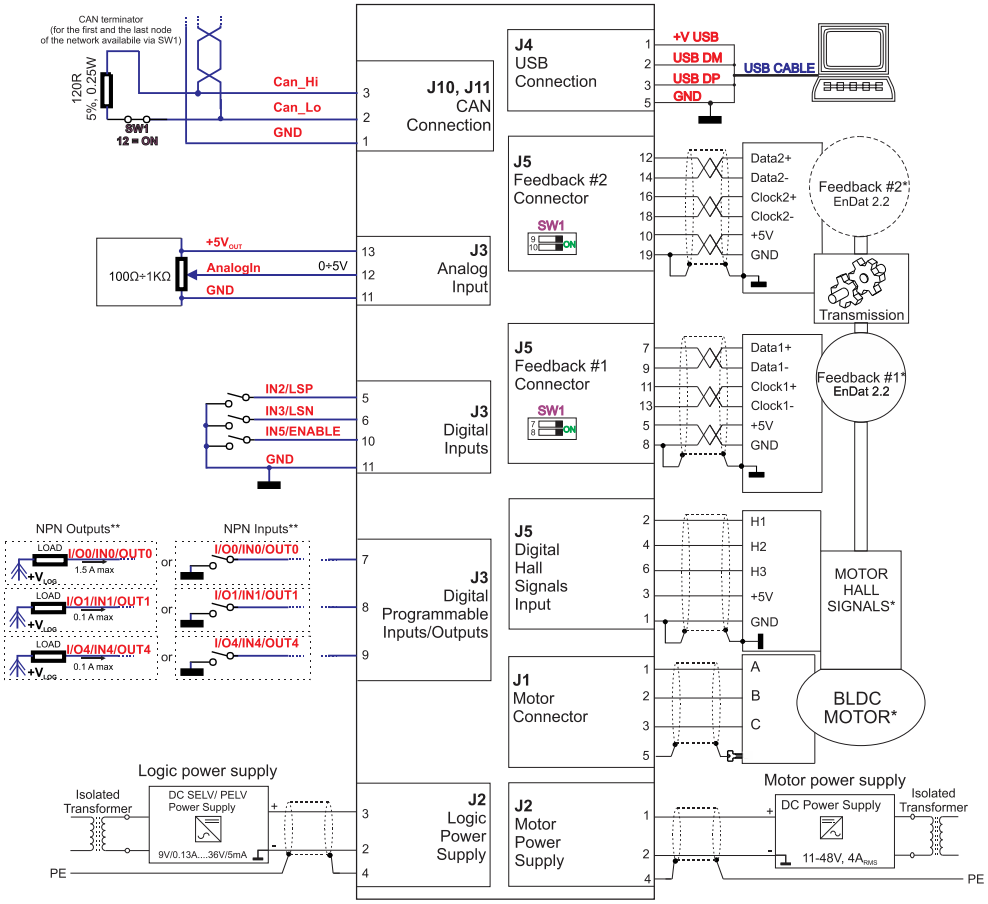

3.10.8 Micro 4804 CZ-CAT connection diagram

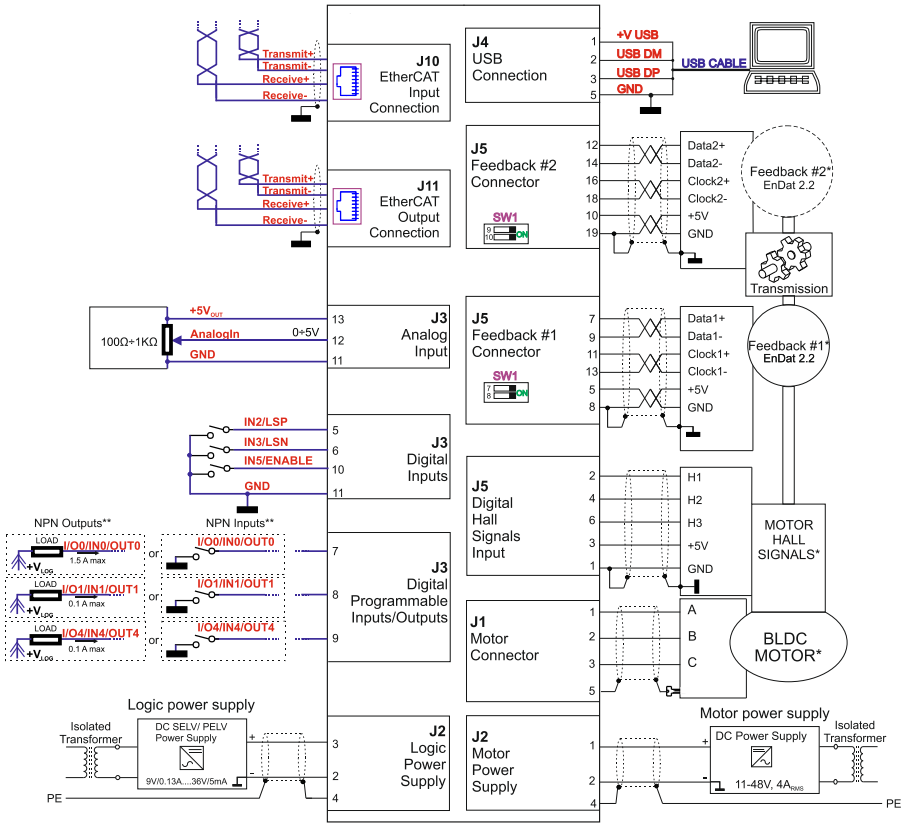

* For other available feedback / motor options, check the detailed connection diagrams below
** Pins are software selectable individually as NPN inputs/outputs

3.10.9 Micro 4804 CZ-CAN-STO connection diagram

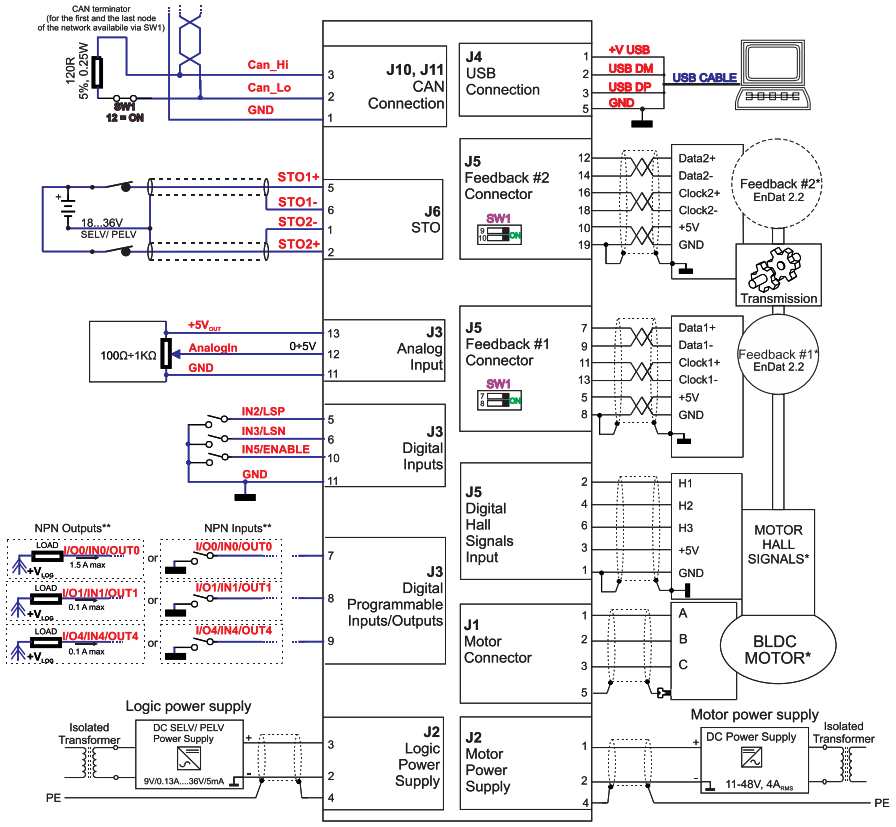

3.10.10 Micro 4804 CZ-CAT-STO connection diagram

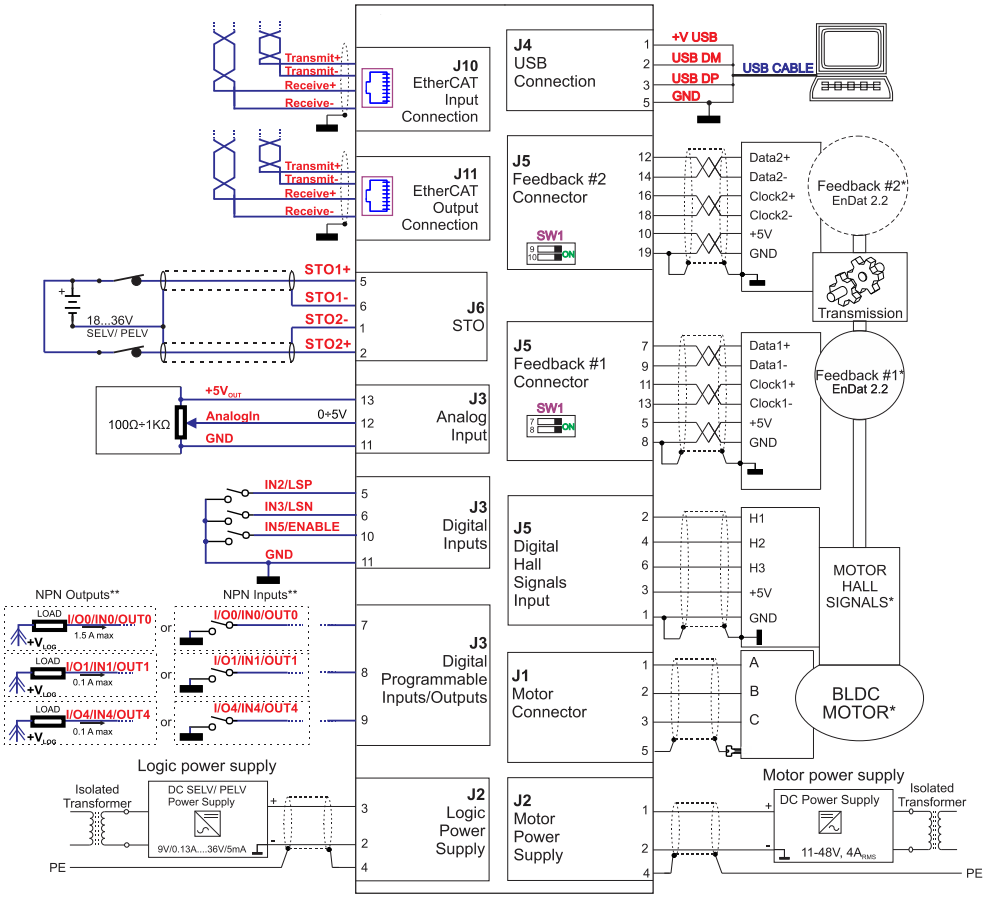

* For other available feedback / motor options, check the detailed connection diagrams below
** Pins are software selectable individually as NPN inputs/outputs

3.11 Digital I/O Connection

3.11.1 NPN inputs

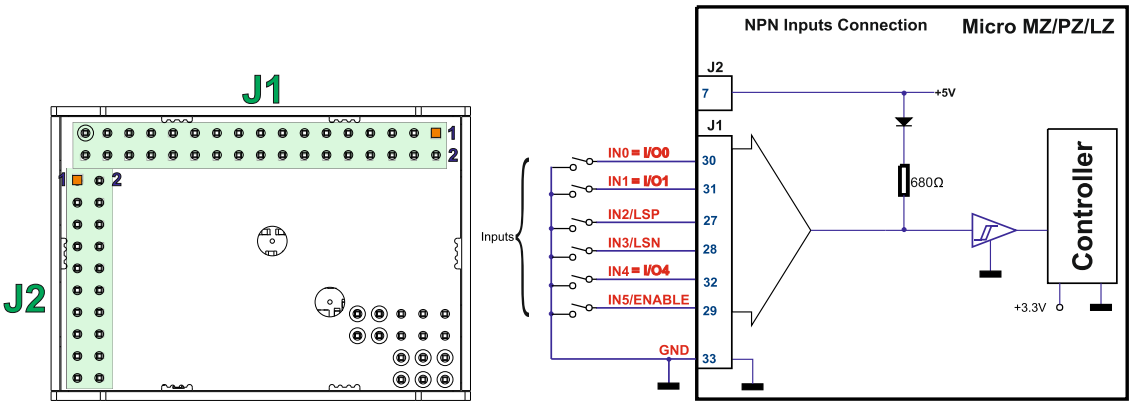

Figure 3-18 **Digital NPN Inputs connection for Micro MZ/PZ/LZ**

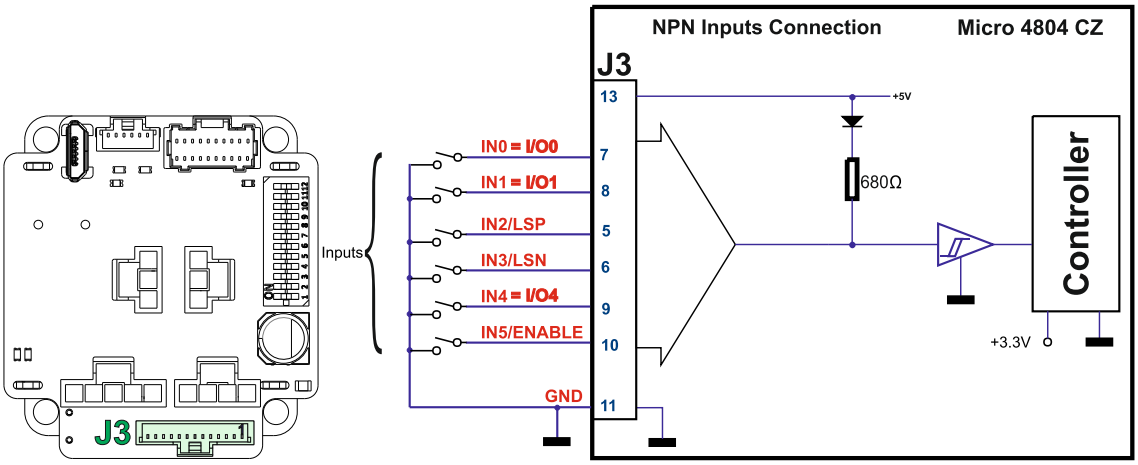

Figure 3-19 **Digital NPN Inputs connection for Micro 4804 CZ**

Remarks:

1. *The inputs are compatible with NPN type outputs (input must be pulled to GND to change its default state).*
2. *The I/O pins are software selectable individually as inputs/outputs.*
3. *For the STO executions of Micro 4804, IN5 serves exclusively as a general-purpose input.*
4. *The length of the cables must be up to 30m, reducing the exposure to voltage surges in industrial environment.*

3.11.2 NPN outputs

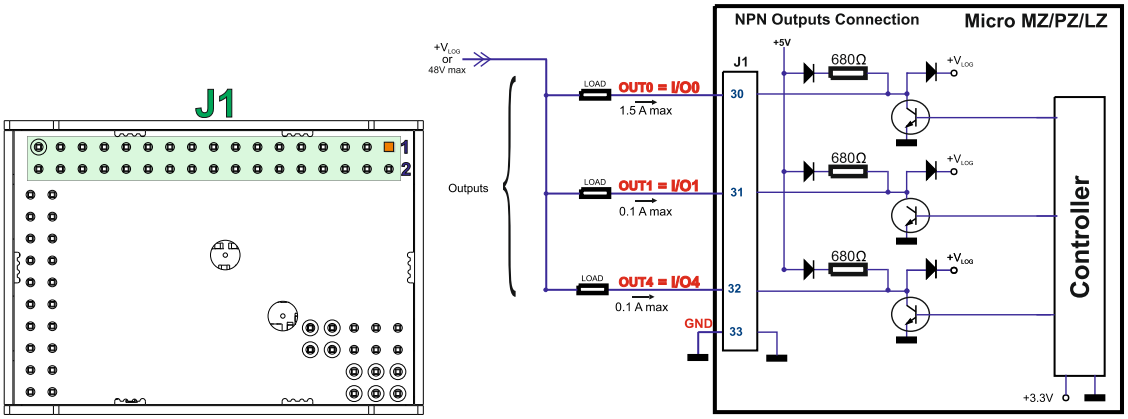

Figure 3-20 **Digital NPN Outputs connection for Micro MZ/PZ/LZ**

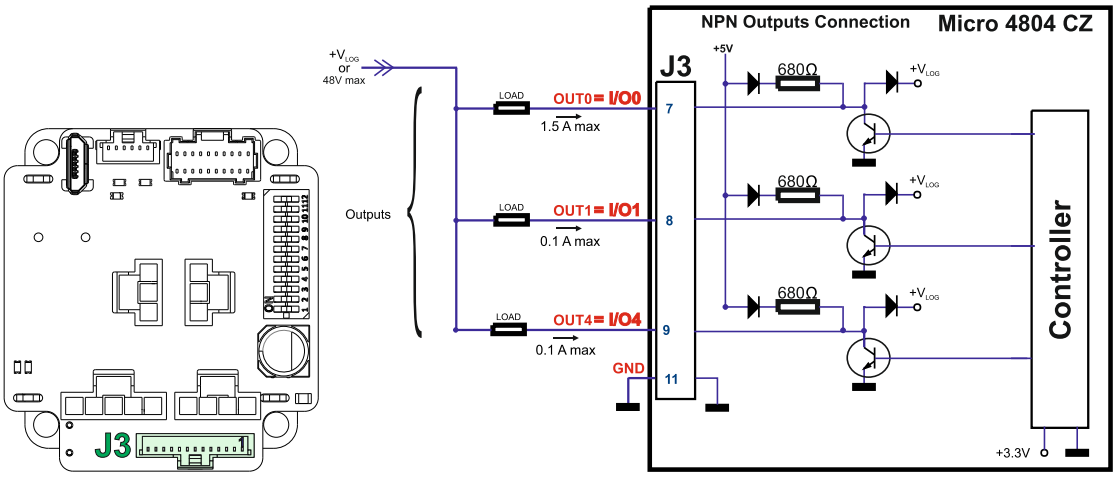

Figure 3-21 **Digital NPN Outputs connection for Micro 4804 CZ**

Remarks:

1. *The outputs are compatible with NPN type inputs (load is tied to common $+V_{LOG}$, output pulls to GND when active and is floating when inactive).*
2. *The I/O pins are software selectable individually as inputs/outputs.*

3.11.3 Solenoid driver connection for motor brake

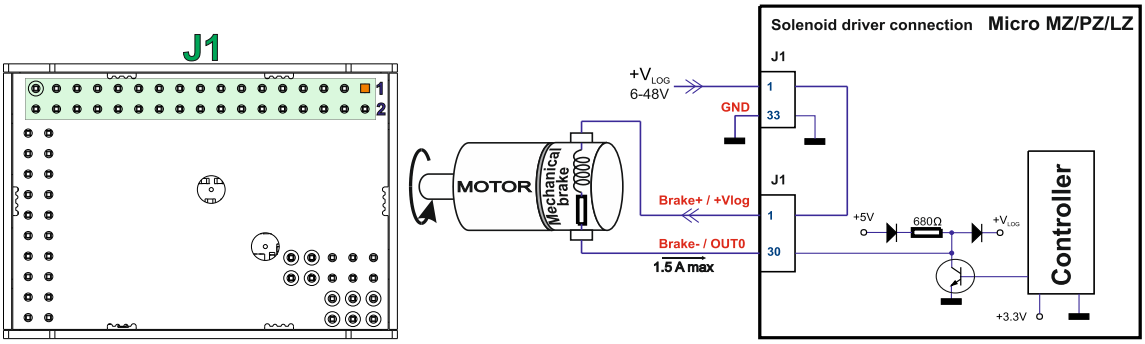

Figure 3-22. **Solenoid driver connection for Micro MZ/PZ/LZ**

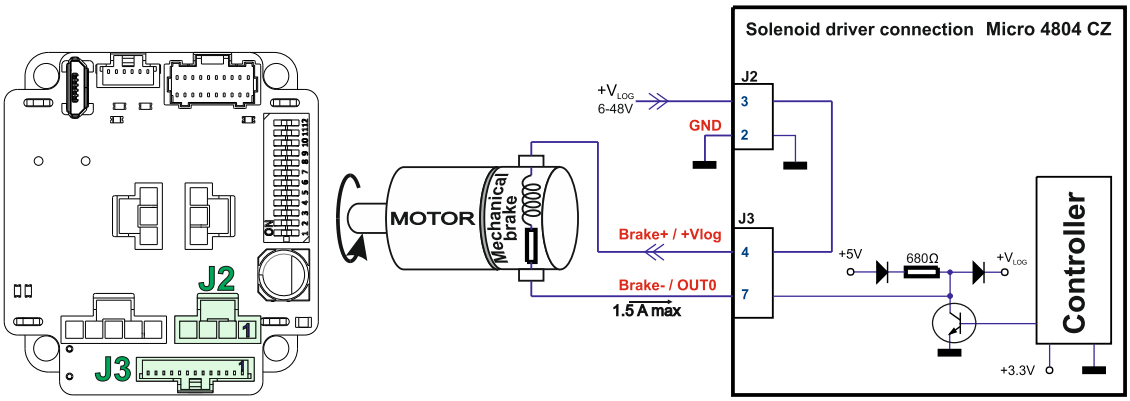

Figure 3-23. **Solenoid driver connection for Micro 4804 CZ**

Remarks:

1. *The firmware can control the Brake- output automatically to engage/disengage a mechanical brake when motor control is started/stopped.*
2. *The Brake- pin can also be used as the NPN digital output OUT0.*
3. *To enable the mechanical brake functionality select the following checkbox from EasyMotion Studio II:*

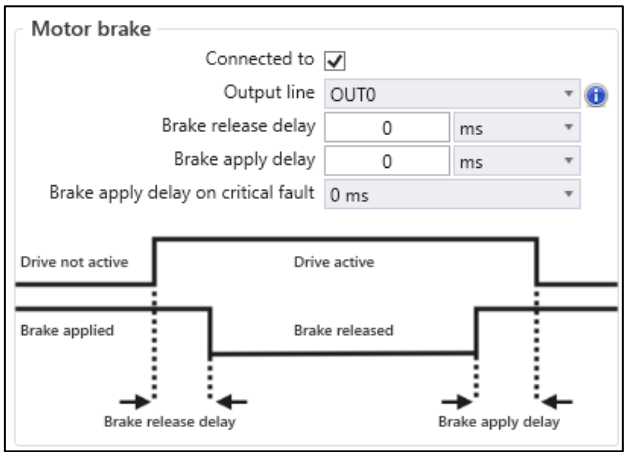

Figure 3-24. **Motor brake checkbox in EasyMotion Studio II**

3.12 Analog Inputs Connection

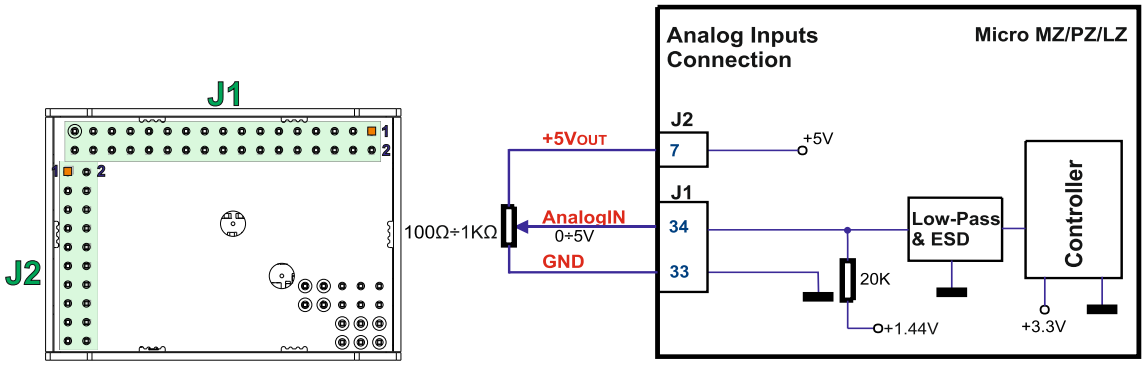

Figure 3-25 ***0-5V*** **Analog inputs connection for 0-5V range on Micro MZ/PZ/LZ**

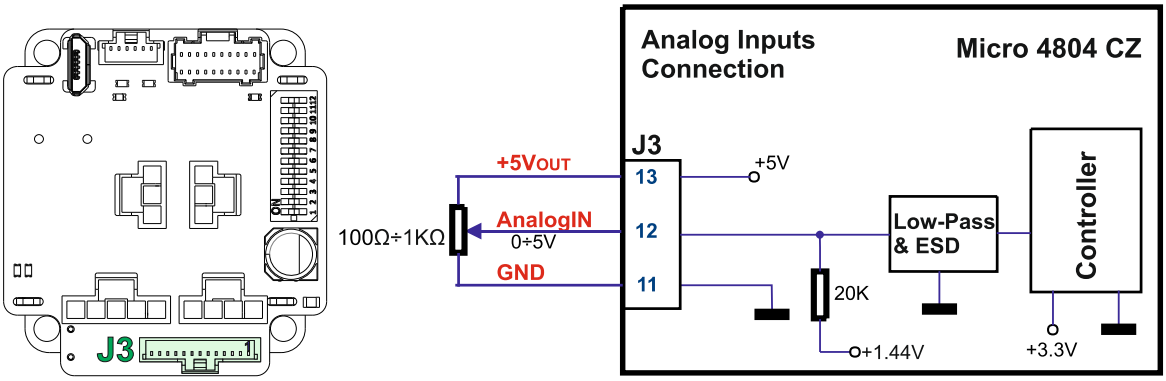

Figure 3-26 ***0-5V*** **Analog inputs connection for 0-5V range on Micro 4804 CZ**

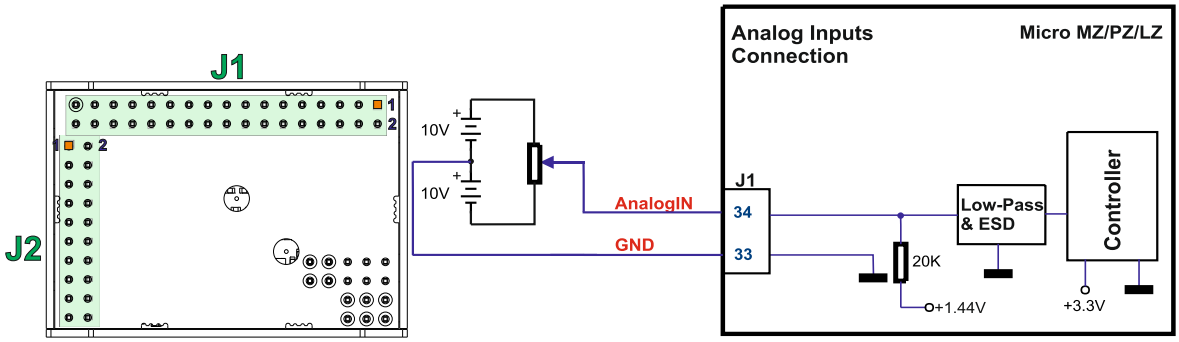

Figure 3-27 ***0-5V*** **Analog inputs connection for ±10V range on Micro MZ/PZ/LZ**

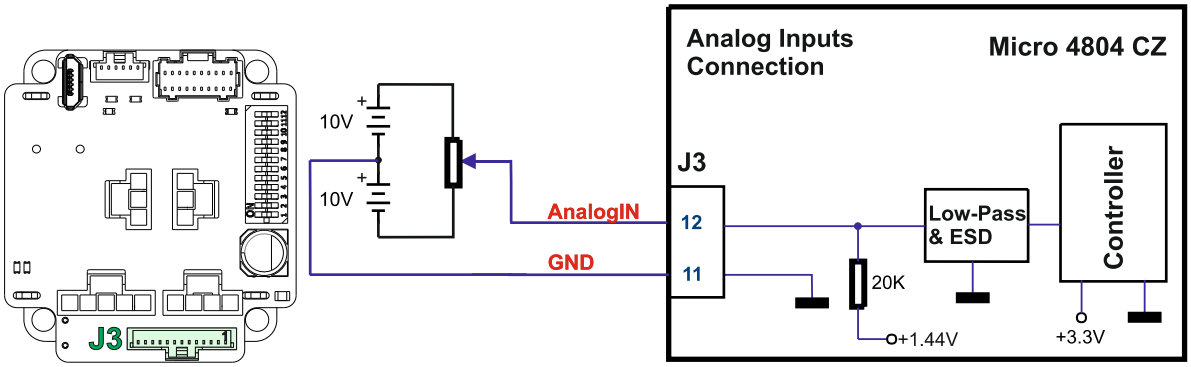

Figure 3-28 ***0-5V*** **Analog inputs connection for ±10V range on Micro 4804 CZ**

Remarks:

1. *The analog input range is configurable by software: ±10V or 0-5V: Reference, Feedback or general purpose input.*
2. *The length of the cables must be up to 30m, reducing the exposure to voltage surges in industrial environment.*

3.12.1.1 Recommendation for wiring

a) If the analogue signal source is single-ended, use a 2-wire twisted shielded cable as follows: 1st wire connects the live signal to the drive input; 2nd wire connects the source ground to the drive ground; shield will be connected to the drive ground terminal.

b) If the analogue signal source is differential and the signal source ground is isolated from the drive GND, use a 2-wire twisted shielded cable as follows: 1st wire connects the source plus (positive, in-phase) to the drive analogue input; 2nd wire connects the source minus (negative, out-of-phase) to the drive ground (GND). Shield is connected only at the drive side, to the drive PE, and is left unconnected at the source side.

c) If the analogue signal source is differential and the signal source ground is common with the drive GND, use a 2-wire shielded cable as follows: 1st wire connects the source plus (positive, in-phase) to the drive analogue input; 2nd wire connects the source ground to the drive ground (GND); shield is connected only at the drive side, to the drive PE, and is left unconnected at the source side. The source minus (negative, out-of-phase) output remains unconnected.

3.13 Motor connections

3.13.1 Brushless Motor connection

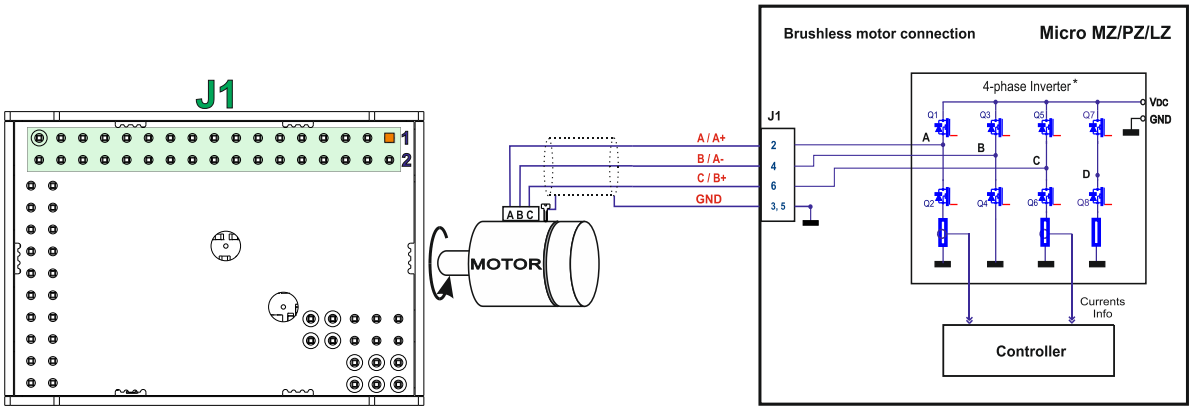

** Micro 4803 is equipped with only a 3-phase inverter.*

Figure 3-29 **Brushless motor connection for Micro MZ/PZ/LZ**

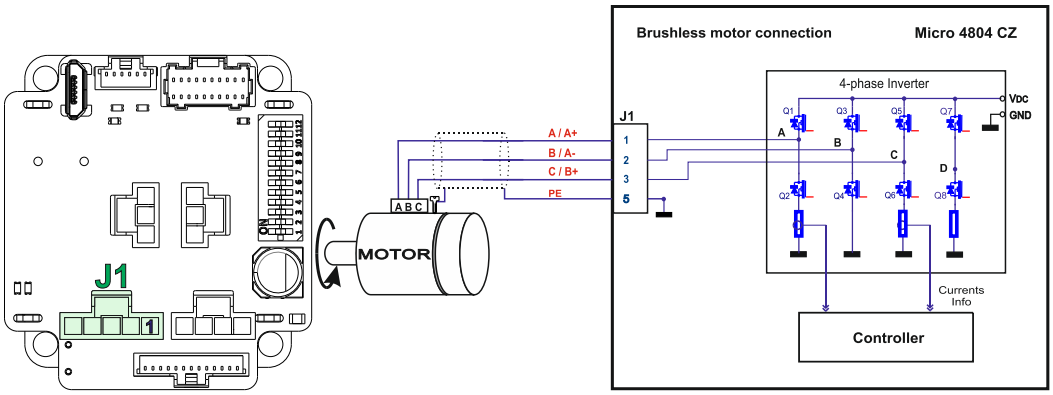

Figure 3-30 **Brushless motor connection for Micro 4804 CZ**

3.13.2 2-phase Step Motor connection[1]

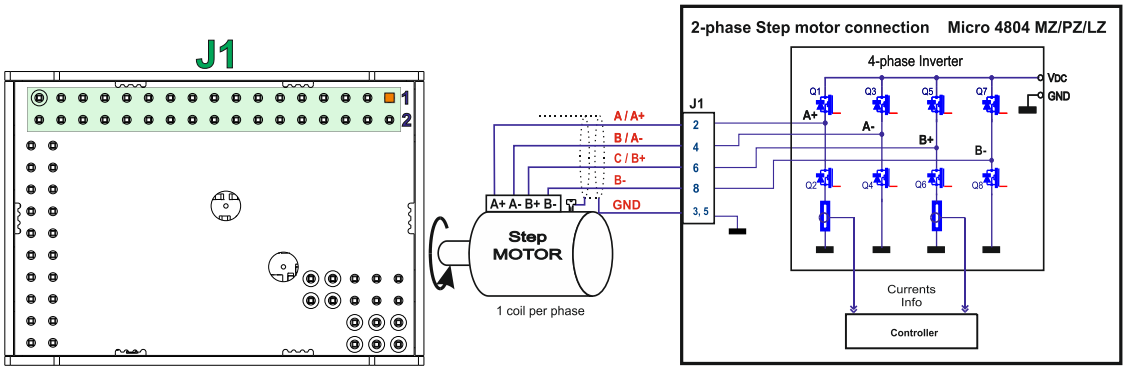

Figure 3-31 **2-phase step motor connection, one coil per phase for Micro 4804 MZ/PZ/LZ**

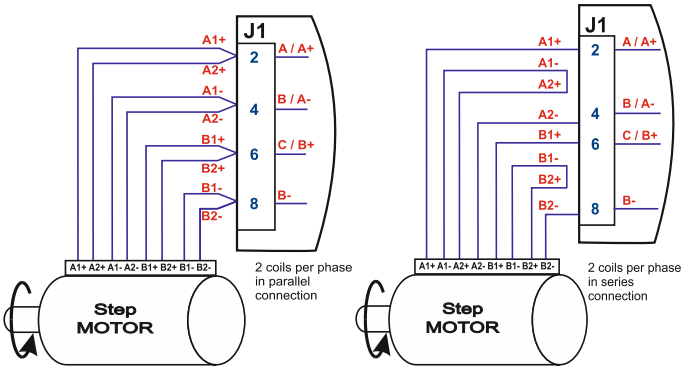

Figure 3-32 **2-phase step motor connection, two coils per phase for Micro 4804 MZ/PZ/LZ**

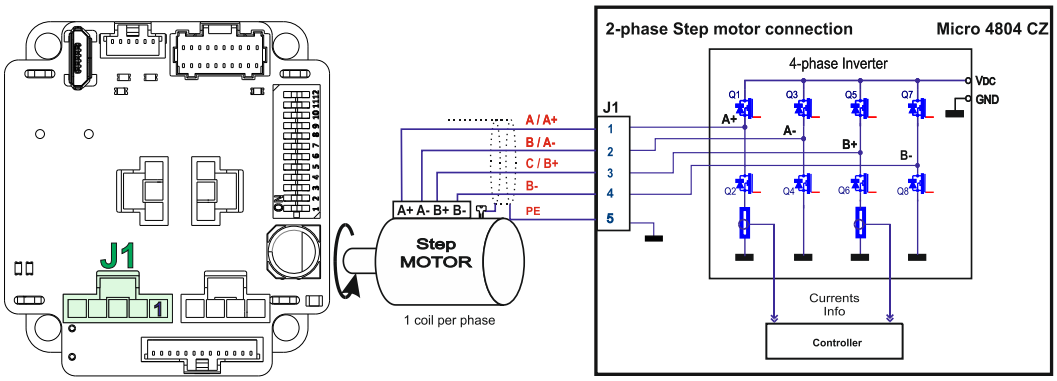

Figure 3-33 **2-phase step motor connection, one coil per phase for Micro 4804 CZ**

[1] Not supported by Micro 4803 executions.

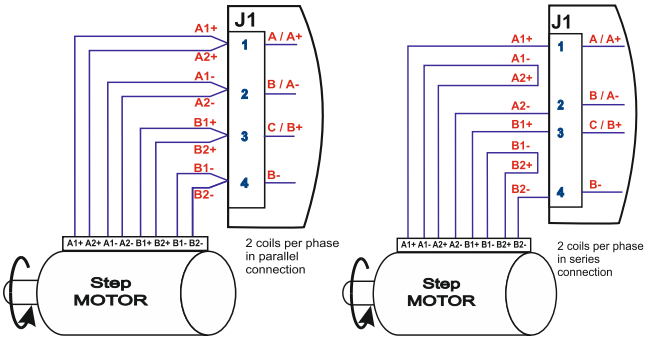

Figure 3-34 **2-phase step motor connection, two coils per phase for Micro 4804 CZ**

3.13.3 3-Phase Step Motor connection[1]

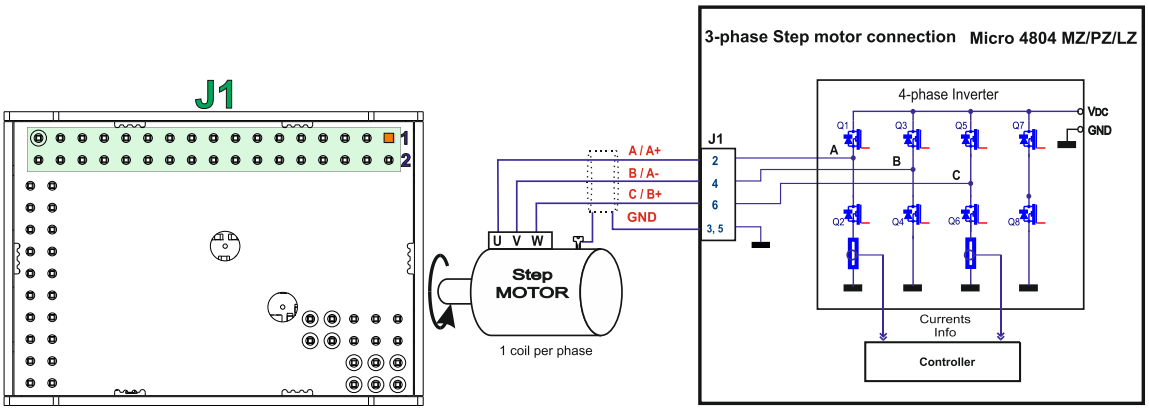

Figure 3-35 **3-phase step motor connection for Micro 4804 MZ/PZ/LZ**

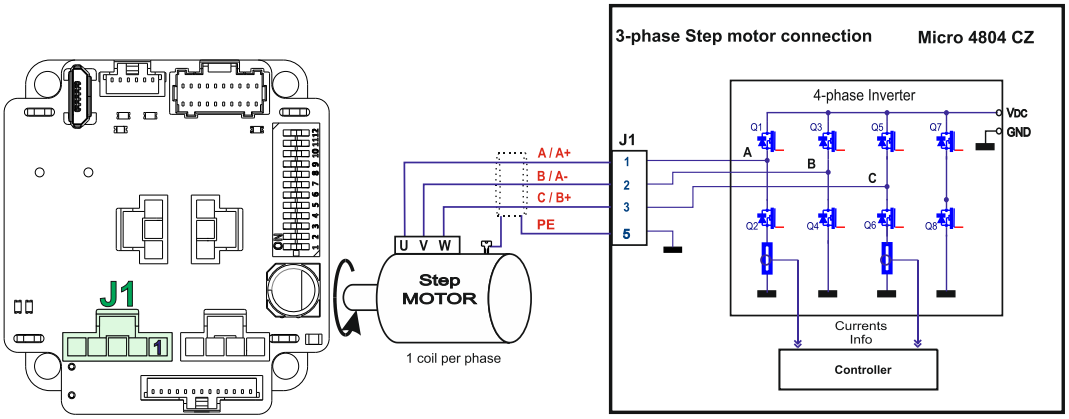

Figure 3-36 **3-phase step motor connection for Micro 4804 CZ**

[1] Not supported by Micro 4803 executions.

3.13.4 DC Motor connection

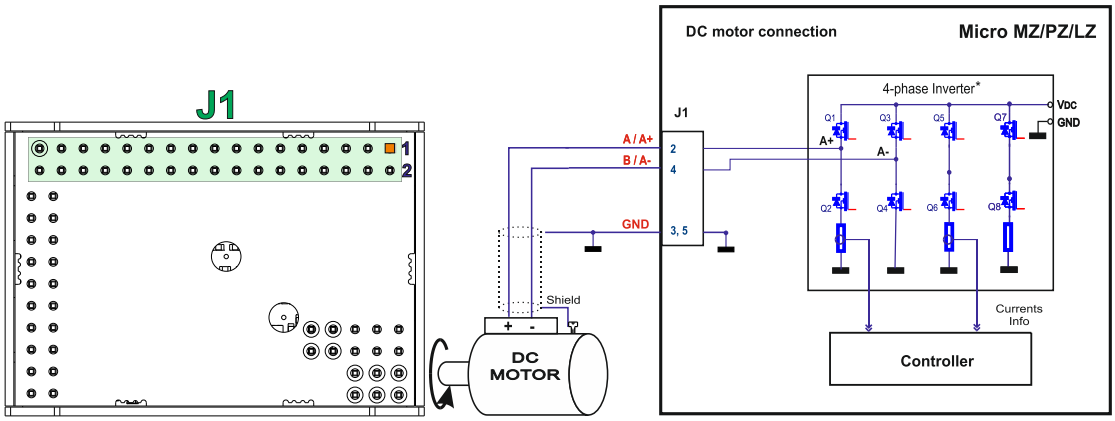

* Micro 4803 is equipped with only a 3-phase inverter.

Figure 3-37 **DC Motor connection for Micro MZ/PZ/LZ**

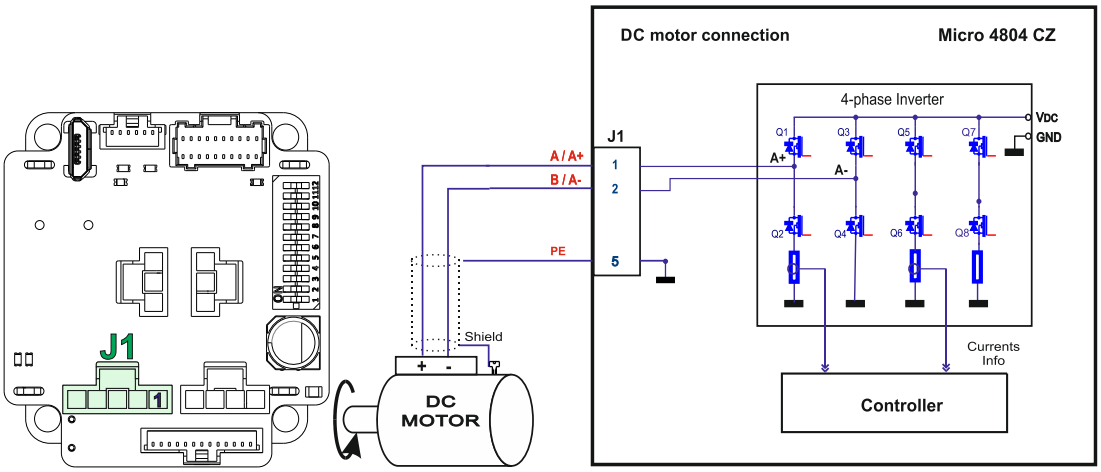

Figure 3-38 **DC Motor connection for Micro 4804 CZ**

3.13.4.1 Recommendations for motor wiring

a) Avoid running the motor wires in parallel with other wires for a distance longer than 2 meters. If this situation cannot be avoided, use a shielded cable for the motor wires. Connect the cable shield to the Micro 4804 GND pin and also to the motor chassis.

b) The parasitic capacitance between the motor wires must not bypass 10nF. If very long cables (tens of meters) are used, this condition may not be met. In this case, add series inductors between the Micro 4804 outputs and the cable. The inductors must be magnetically shielded (toroidal, for example), and must be rated for the motor surge current. Typically the necessary values are around 100 µH.

c) A good shielding can be obtained if the motor wires are running inside a metallic cable guide.

3.14 Feedback connections

3.14.1 Feedback #1 - Single-ended Incremental Encoder Connection

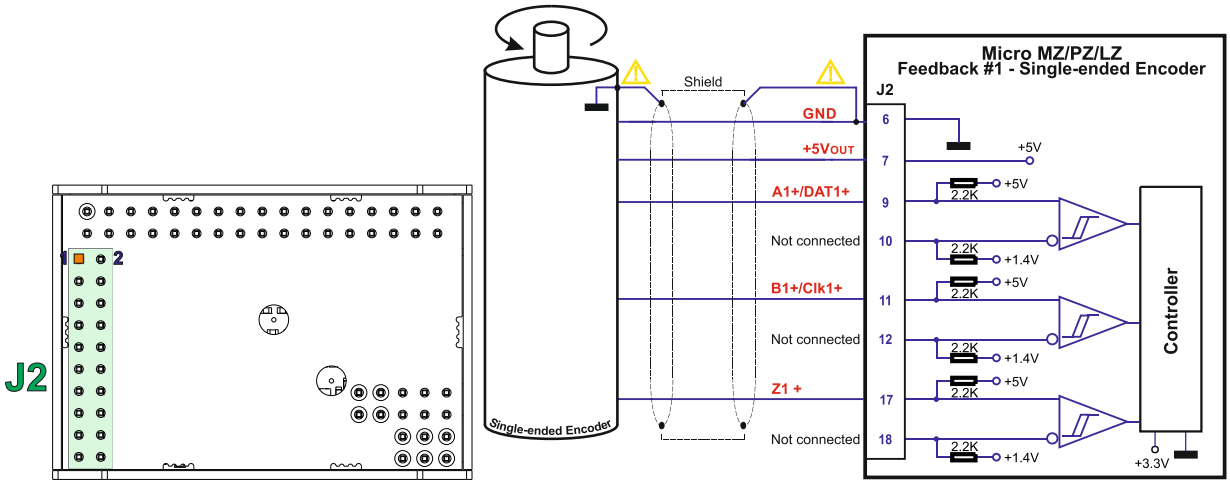

Figure 3-39 **Feedback #1 - Single-ended Incremental Encoder Connection for Micro MZ/PZ/LZ**

CAUTION!	***Do not connect unterminated wires to pins J2.10, J2.12 and J2.18. They might pick up unwanted noise and give false encoder readings.*** ***Encoder cable shield must be connected to system GND to avoid disturbances / noise induced by nearby cables.***

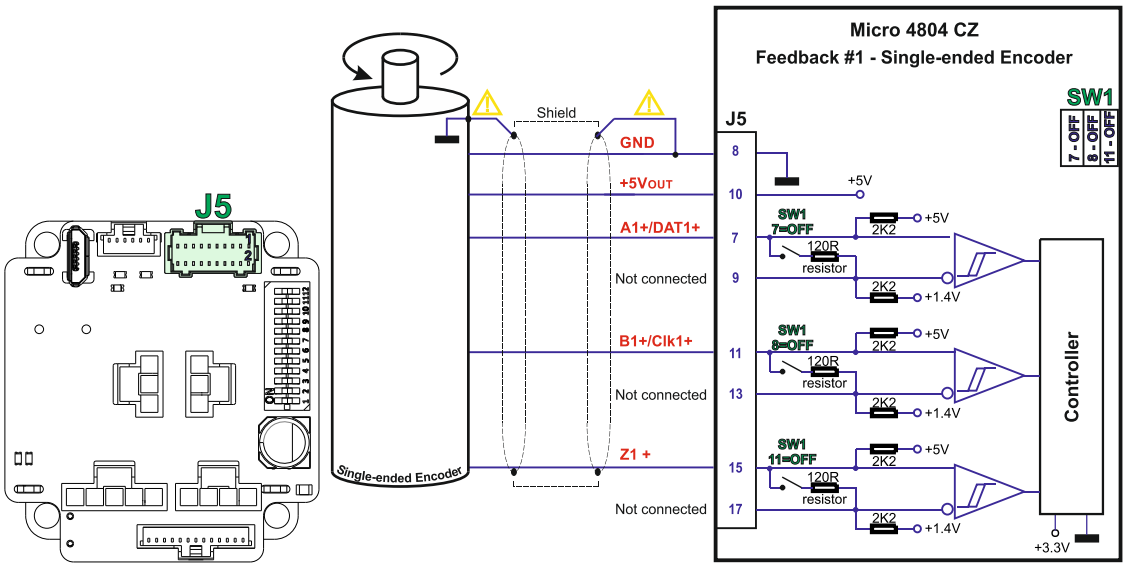

Figure 3-40 **Feedback #1 - Single-ended Incremental Encoder Connection for Micro 4804 CZ**

CAUTION!	***Do not connect unterminated wires to pins J5.9, J5.13 and J5.17. They might pick up unwanted noise and give false encoder readings.*** ***Encoder cable shield must be connected to system GND to avoid disturbances / noise induced by nearby cables.***

3.14.2 Feedback #1 - Differential Incremental Encoder Connection

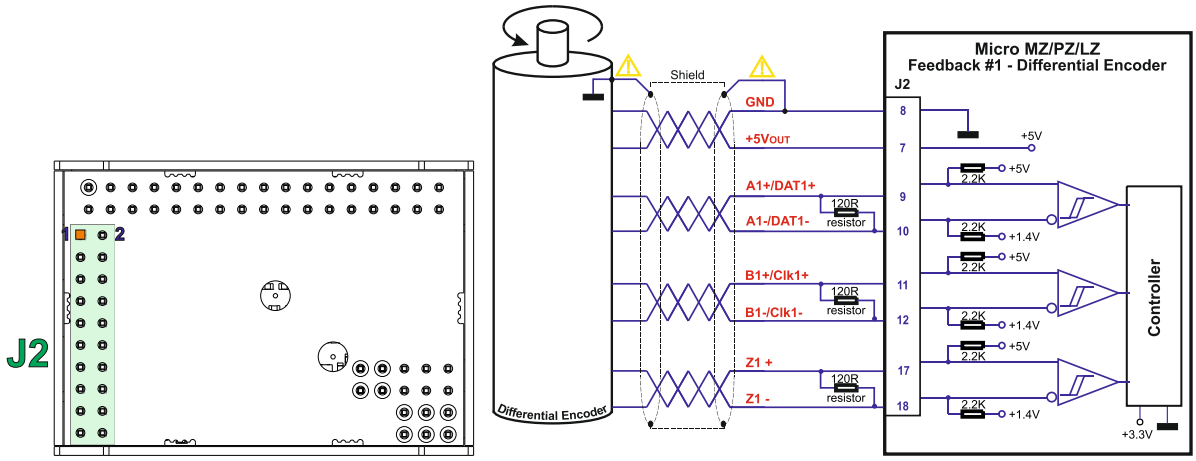

Figure 3-41 **Feedback #1 - Differential Incremental Encoder Connection for Micro MZ/PZ/LZ**

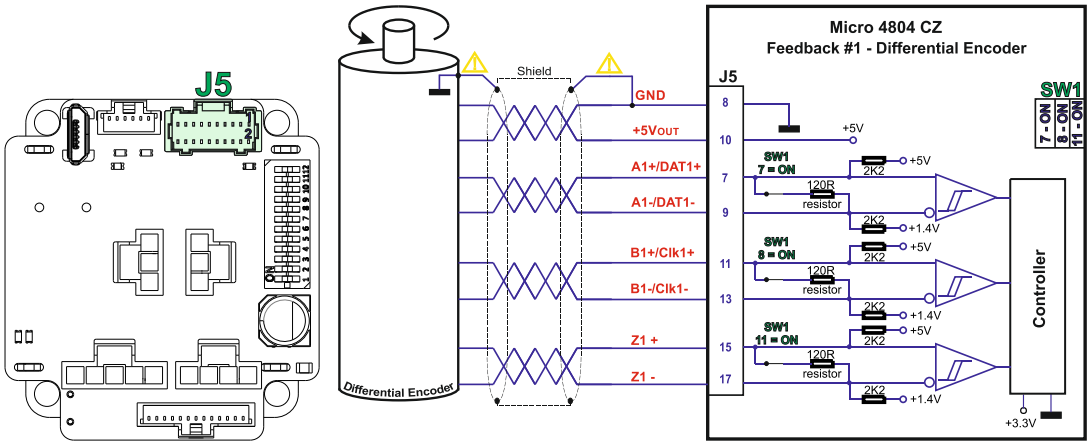

Figure 3-42 **Feedback #1 - Differential Incremental Encoder Connection for Micro 4804 CZ**

Remarks:

1. *For Micro MZ/PZ/LZ Feedback#1 differential connection, 120Ω (0.25W) terminators must be connected for long encoder cables, or noisy environments.*
2. *For the Micro 4804 CZ Feedback #1 differential connection, 120Ω (0.25W) terminators are internally added by setting SW1 pins 7, 8, and 11 to the "ON" position.*
3. *The length of the cables must be up to 30m, reducing the exposure to voltage surges in industrial environment.*

CAUTION!	***Encoder cable shield must be connected to system GND to avoid disturbances / noise induced by nearby cables.***

3.14.3 Feedback #2[1] - Single-ended Incremental Encoder Connection

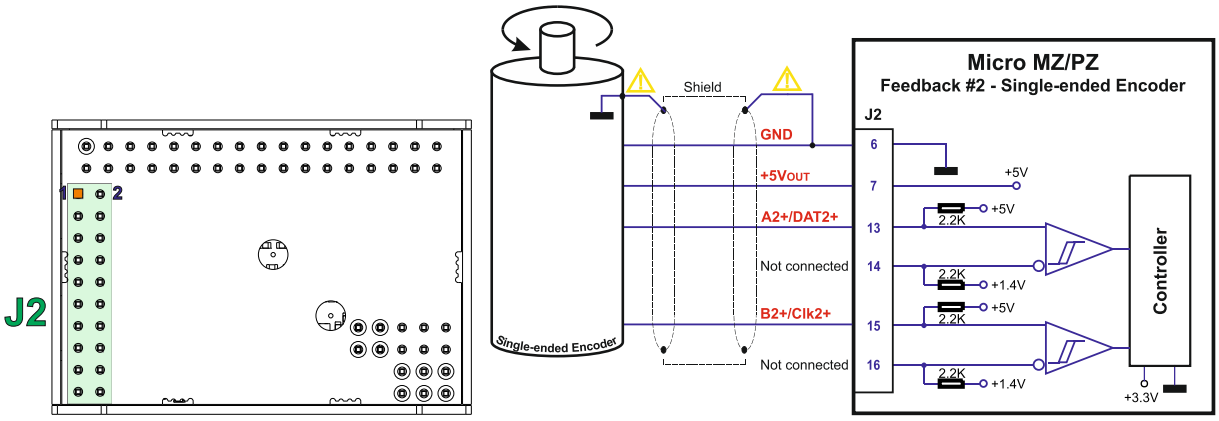

Figure 3-43 **Feedback #2 - Single-ended Incremental Encoder Connection for Micro MZ/PZ**

CAUTION!	***Do not connect unterminated wires to pins J2.14 and J2.16. They might pick up unwanted noise and give false encoder readings.*** ***Encoder cable shield must be connected to system GND to avoid disturbances / noise induced by nearby cables.***

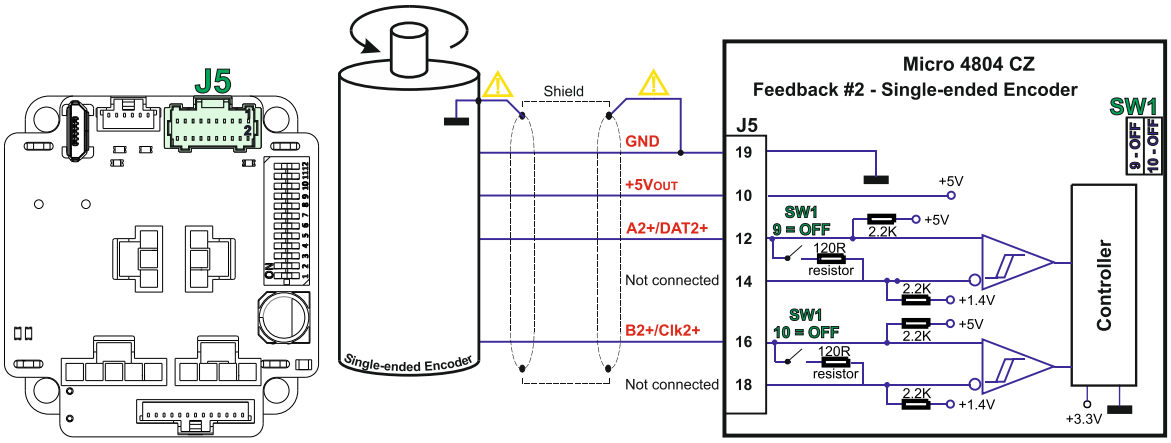

Figure 3-44 **Feedback #2 - Single-ended Incremental Encoder Connection for Micro 4804 CZ**

CAUTION!	***Do not connect unterminated wires to pins J5.14 and J5.18. They might pick up unwanted noise and give false encoder readings.*** ***Encoder cable shield must be connected to system GND to avoid disturbances / noise induced by nearby cables.***

[1] Feedback #2 is not available for Micro LZ executions.

3.14.4 Feedback #2[1] - Differential Incremental Encoder Connection

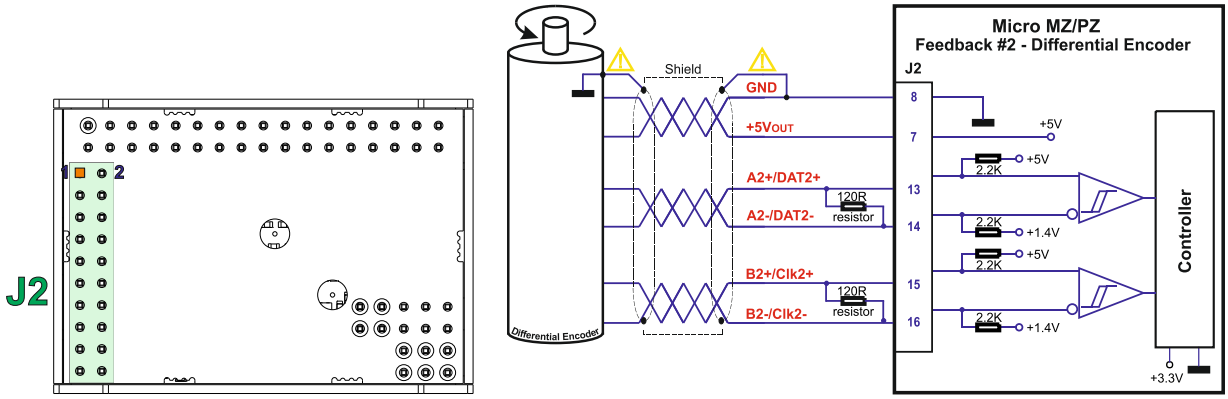

Figure 3-45 **Feedback #2 - Differential Incremental Encoder Connection for Micro MZ/PZ**

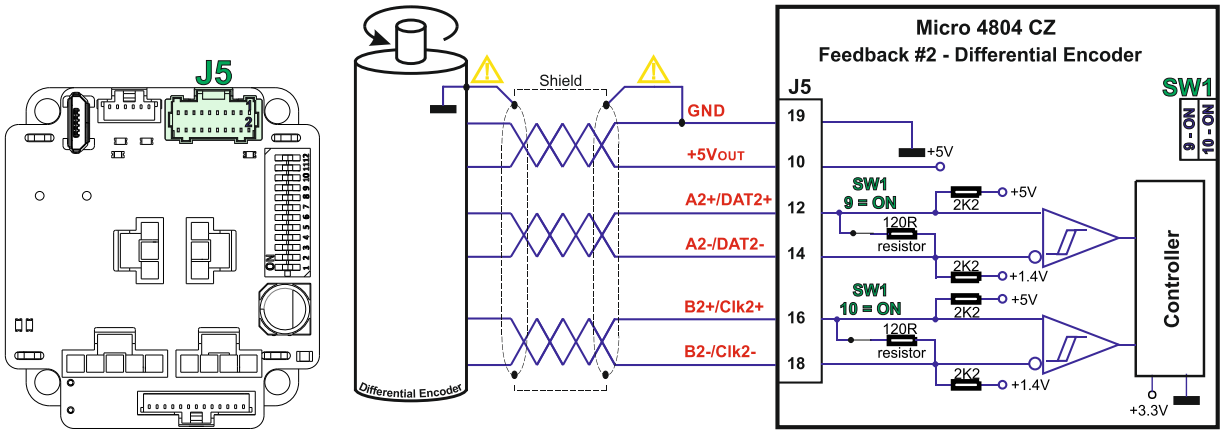

Figure 3-46 **Feedback #2 - Differential Incremental Encoder Connection for Micro 4804 CZ**

Remarks:

1. *For Micro MZ/PZ Feedback#2 differential absolute connection, 120Ω (0.25W) terminators must be connected for long encoder cables, or noisy environments.*
2. *For Micro 4804 CZ Feedback #2 features internal terminators, equivalent to 120Ω (0.25W), connected between the encoder lines through SW1 positions 9 and 10.*
3. *The length of the cables must be up to 30m, reducing the exposure to voltage surges in industrial environment.*

CAUTION!	***Encoder cable shield must be connected to system GND to avoid disturbances / noise induced by nearby cables.***

[1] Feedback #2 is not available for Micro LZ executions.

3.14.5 Feedback #1 – Absolute Encoder Connection: SSI, BiSS, EnDAT[1]

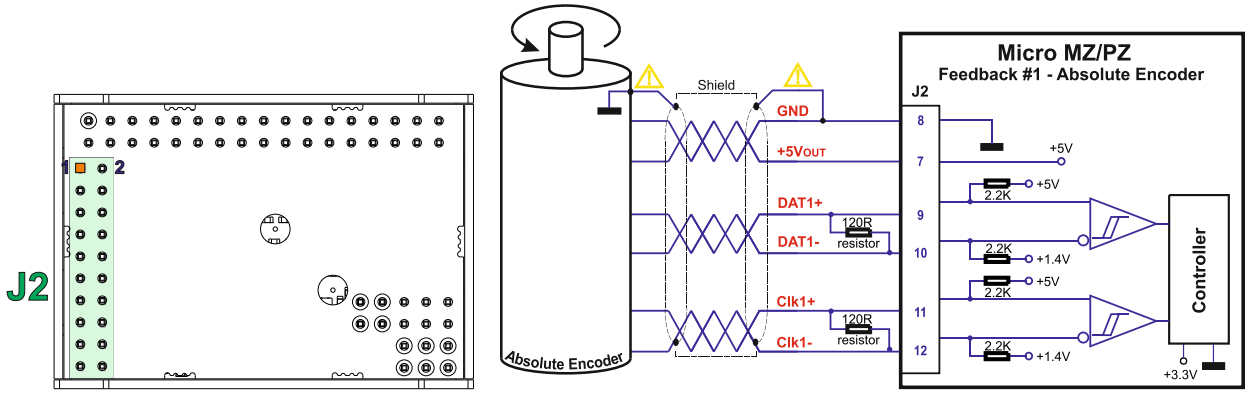

Figure 3-47 **Feedback #1 – Absolute Encoder Connection for Micro MZ/PZ**

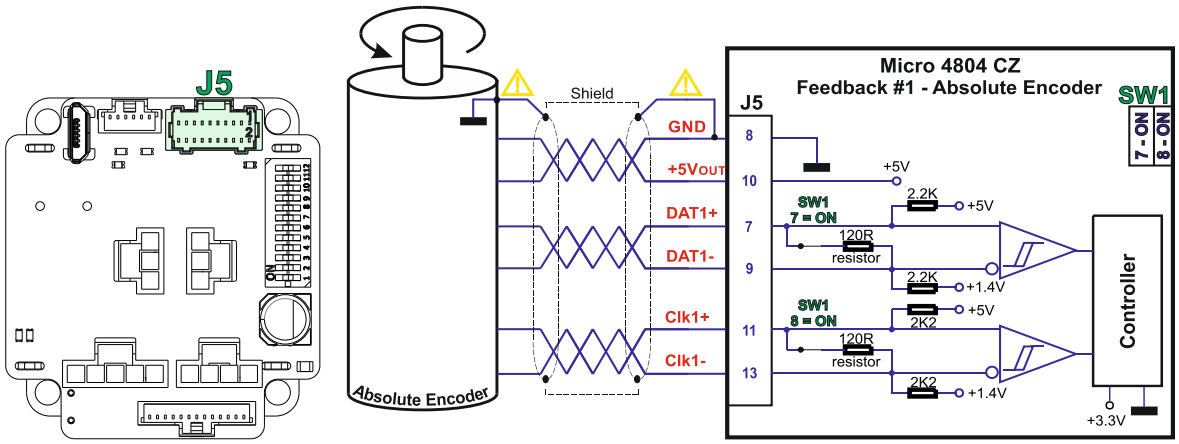

Figure 3-48 **Feedback #1 – Absolute Encoder Connection for Micro 4804 CZ**

Remarks:

1. *For Micro MZ/PZ Feedback#1 differential absolute connection, 120Ω (0.25W) terminators must be connected for long encoder cables, or noisy environments.*
2. *For the Micro 4804 CZ Feedback #1 absolute connection, internal terminators equivalent to 120Ω (0.25W) must be connected between the encoder lines via SW1 positions 7 and 8.*
3. *The length of the cables must be up to 30m, reducing the exposure to voltage surges in industrial environment.*

CAUTION!	***Encoder cable shield must be connected to system GND to avoid disturbances / noise induced by nearby cables.***

[1] Absolute encoders (SSI / EnDAT2.2 / BiSS-C / Tamagawa / Panasonic / Nikon / Sanyo Denki) are not supported by the Micro LZ executions.

3.14.6 Feedback #1 – Absolute Encoder Connection: Nikon, Tamagawa, Panasonic, Sanyo Denki[1]

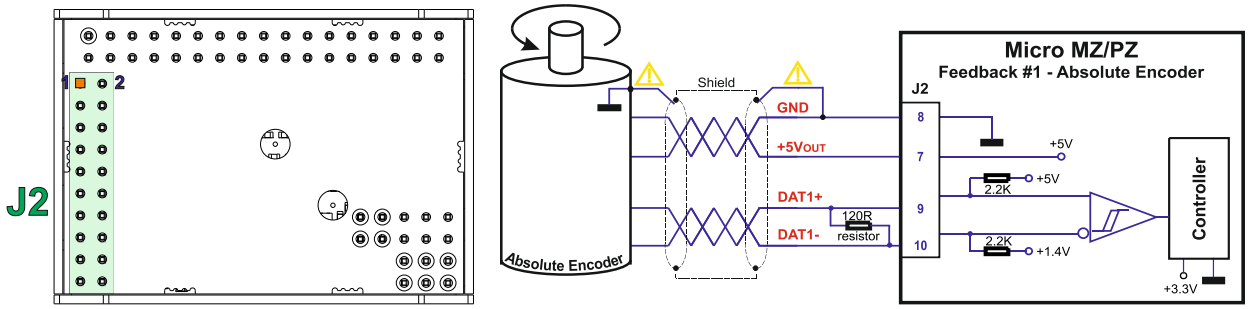

Figure 3-49 **Feedback #1 – Absolute Encoder Connection for Micro MZ/PZ**

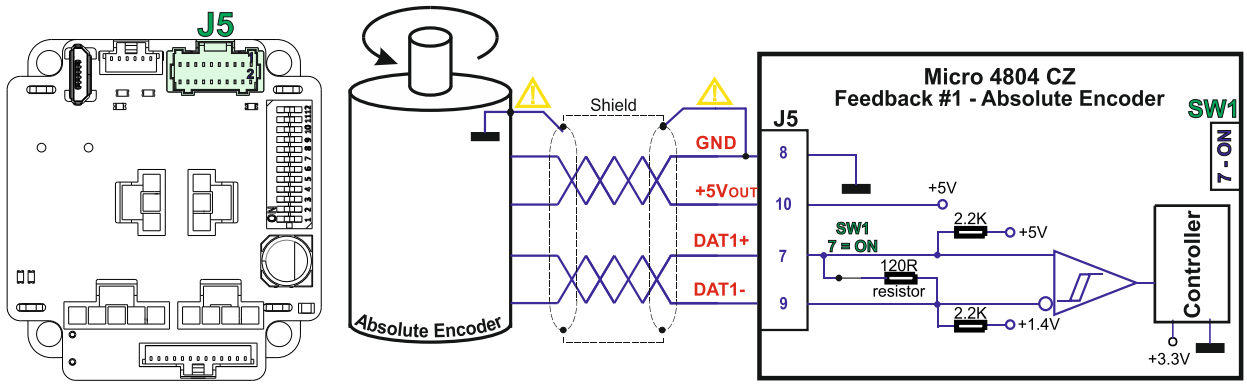

Figure 3-50 **Feedback #1 – Absolute Encoder Connection for Micro 4804 CZ**

Remarks:

1. *For Micro 4804 MZ/PZ Feedback#1 differential absolute connection, 120Ω (0.25W) terminators must be connected for long encoder cables, or noisy environments.*
2. *For the Micro 4804 CZ Feedback #1 absolute connection, internal terminators equivalent to 120Ω (0.25W) must be connected between the encoder lines via SW1 position 7.*
3. *The length of the cables must be up to 30m, reducing the exposure to voltage surges in industrial environment.*

CAUTION!	***Encoder cable shield must be connected to system GND to avoid disturbances / noise induced by nearby cables.***

[1] Absolute encoders (SSI / EnDAT2.2 / BiSS-C / Tamagawa / Panasonic / Nikon / Sanyo Denki) are not supported by the Micro LZ executions.

3.14.7 Feedback #2[1] – Absolute Encoder Connection: SSI, BiSS, EnDAT

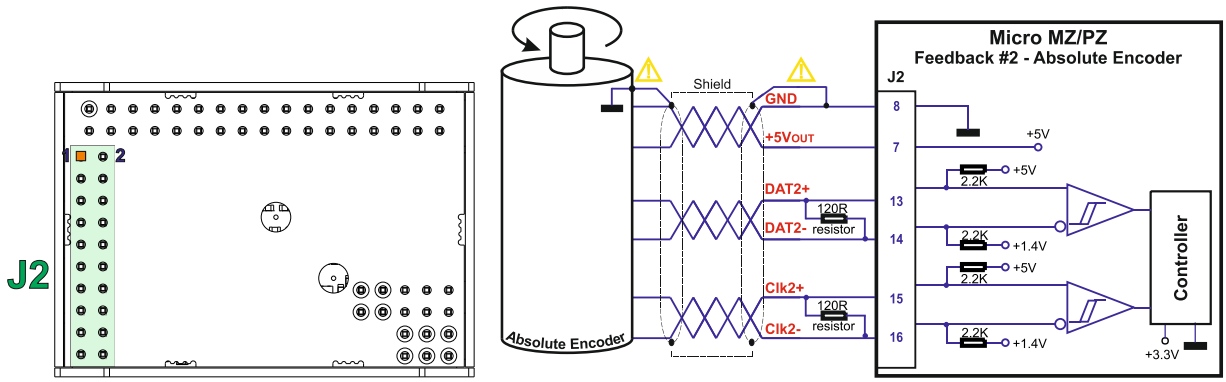

Figure 3-51 **Feedback #2 – Absolute Encoder Connection for Micro MZ/PZ**

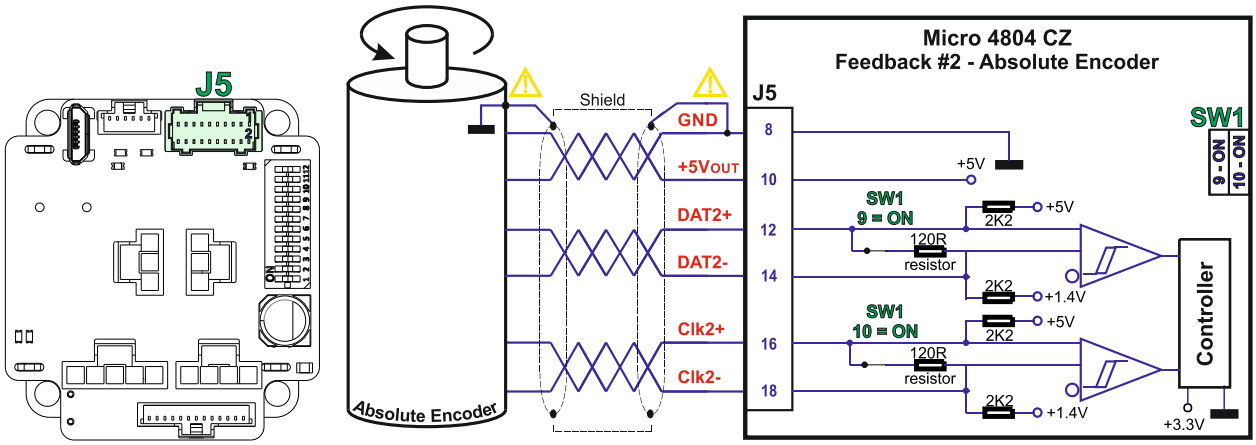

Figure 3-52 **Feedback #2 – Absolute Encoder Connection for Micro 4804 CZ**

Remarks:

1. *For Micro MZ/PZ Feedback#2 absolute connection, 120Ω (0.25W) terminators must be connected for long encoder cables, or noisy environments.*
2. *For the Micro 4804 CZ Feedback #2 absolute connection, internal terminators equivalent to 120Ω (0.25W) must be connected between the encoder lines via SW1 positions 9 and 10.*
3. *The length of the cables must be up to 30m, reducing the exposure to voltage surges in industrial environment.*

CAUTION!	***Encoder cable shield must be connected to system GND to avoid disturbances / noise induced by nearby cables.***

[1] Feedback #2 is not available for Micro LZ executions.

3.14.8 Feedback #2[1] – Absolute Encoder Connection: Nikon, Tamagawa, Panasonic, Sanyo Denki

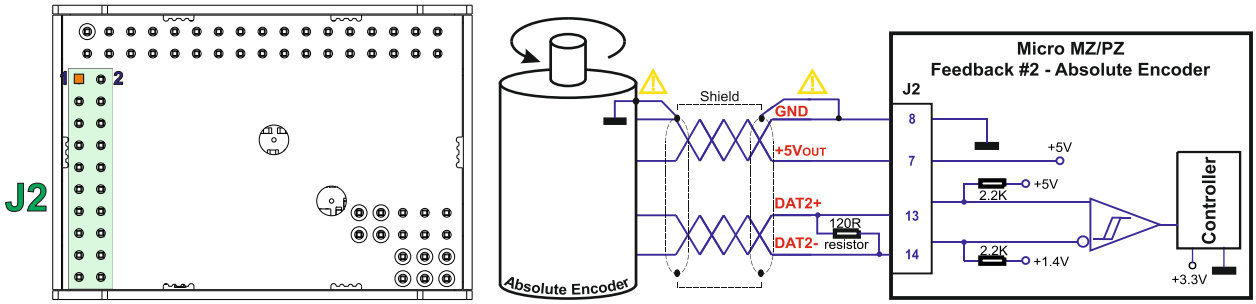

Figure 3-53 **Feedback #2 – Absolute Encoder Connection for Micro 4804 MZ/PZ**

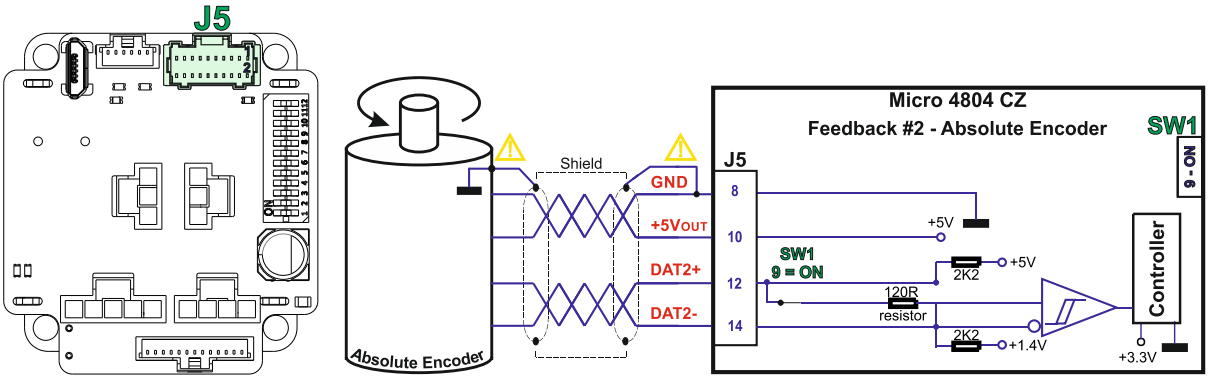

Figure 3-54 **Feedback #2 – Absolute Encoder Connection for Micro 4804 CZ**

Remarks:

1. *For Micro MZ/PZ Feedback#2 absolute connection, 120Ω (0.25W) terminators must be connected for long encoder cables, or noisy environments.*
2. *For the Micro 4804 CZ Feedback #2 absolute connection, internal terminators equivalent to 120Ω (0.25W) must be connected between the encoder lines via SW1 position 9.*
3. *The length of the cables must be up to 30m, reducing the exposure to voltage surges in industrial environment.*

CAUTION!	***Encoder cable shield must be connected to system GND to avoid disturbances / noise induced by nearby cables.***

[1] Feedback #2 is not available for Micro LZ executions

3.14.9 Linear (Analog) Hall Connection[1]

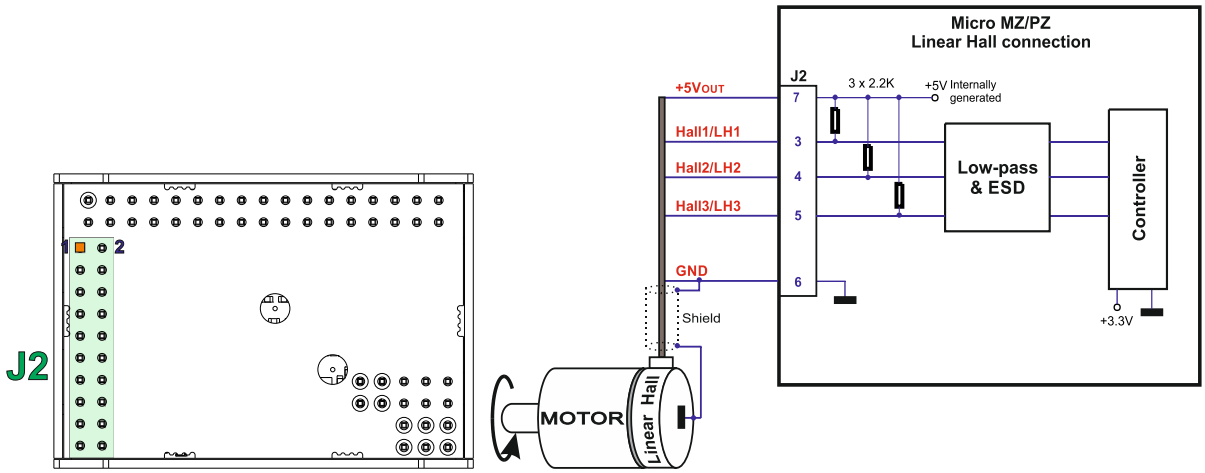

Figure 3-55 **Linear Hall connection for Micro MZ/PZ**

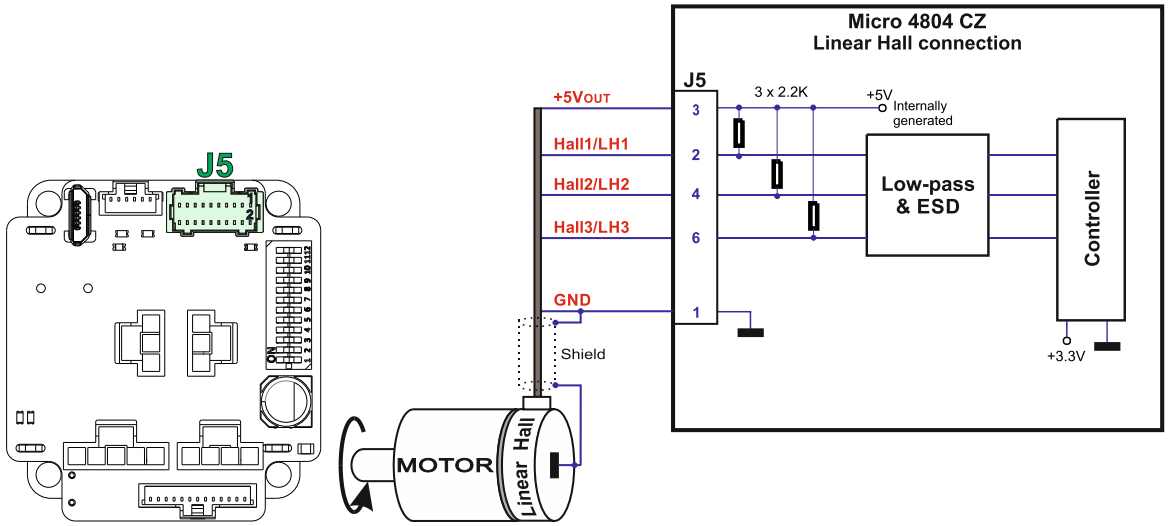

Figure 3-56 **Linear Hall connection for Micro 4804 CZ**

CAUTION!	***Analog Hall cable shield must be connected to system GND to avoid disturbances / noise induced by nearby cables.***

[1] Linear Hall connection is not available for Micro LZ executions

3.14.10 Digital Hall Connection for Motor + Hall + Incremental or Absolute Encoder

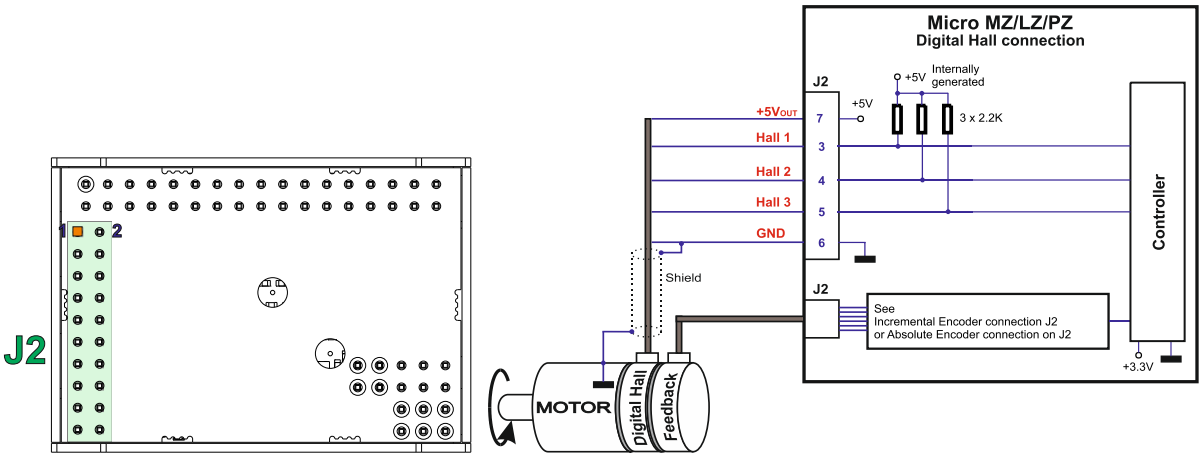

Figure 3-57 **Digital Hall connection for Micro MZ/PZ/LZ**

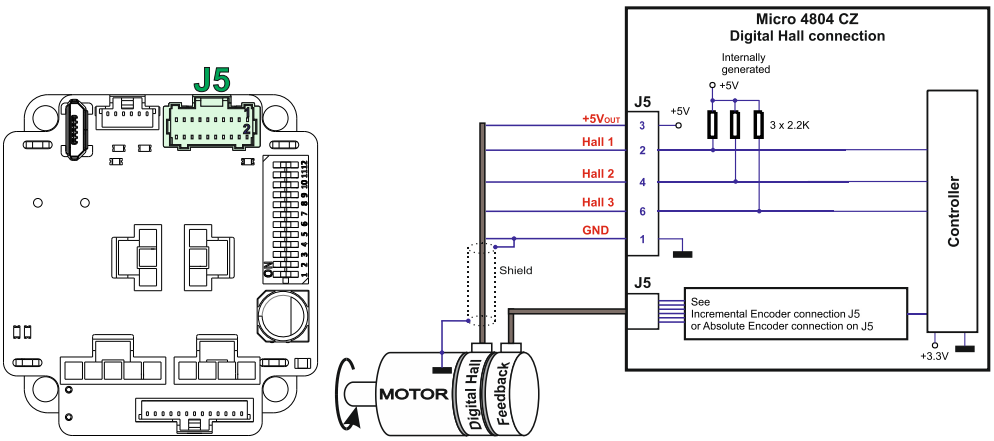

Figure 3-58 **Digital Hall connection for Micro 4804 CZ**

Remarks:

1. *This connection is necessary when using the Hall start method for BLDC or PMSM motors, as well as for the Trapezoidal commutation method. In this setup, the digital halls are not used as feedback measurement devices; instead, motor control is performed using an incremental encoder.*
2. *The Micro 4804 drives are equipped with a feature that detects breakage of Hall wires and/or of incremental/absolute encoder wires.* [1]
3. *The length of the cables must be up to 30m, reducing the exposure to voltage surges in industrial environment.*

CAUTION!	***Digital Hall cable shield must be connected to system GND to avoid disturbances / noise induced by nearby cables.***

[1] In case of an absolute encoder connection, if only just one wire is missing from a pair the breakage can't be detected.

3.14.11 Digital Hall Connection for Motor + Digital Hall only control

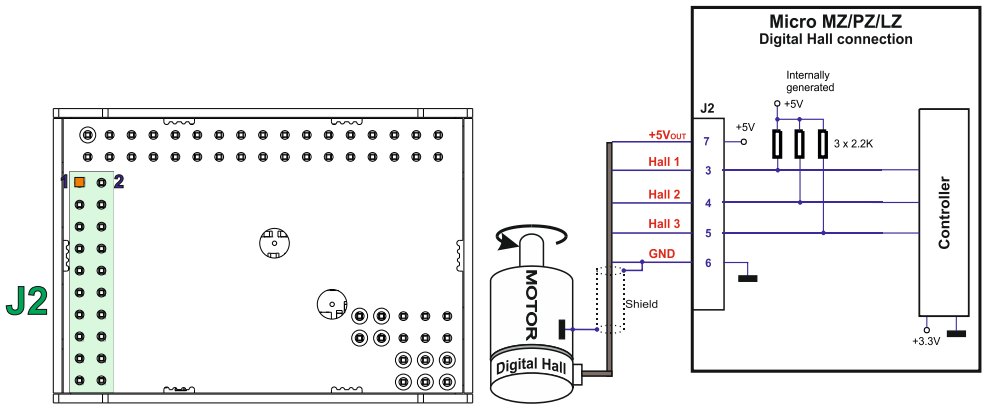

Figure 3-59 **Digital Hall connection for Micro MZ/PZ/LZ**

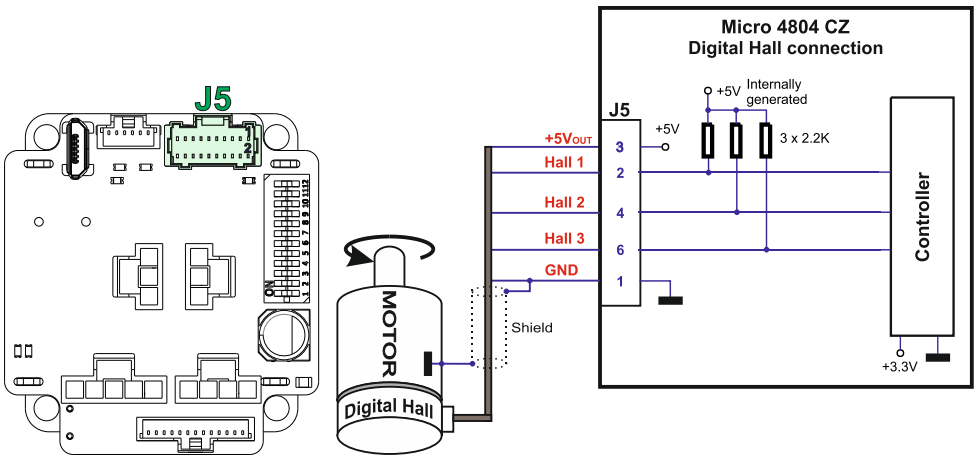

Figure 3-60 **Digital Hall connection for Micro 4804 CZ**

Remarks:

1. *This connection is required when using only Digital hall signals as the main feedback device for motor control. In this case, no incremental encoder is needed.*
2. *The length of the cables must be up to 30m, reducing the exposure to voltage surges in industrial environment.*
3. *While using this control scheme, the incremental encoder signals are used internally by the drive.*

CAUTION!	***Digital Hall cable shield must be connected to system GND to avoid disturbances / noise induced by nearby cables.***

3.14.11.1 General recommendations for feedback wiring

a) Always connect both positive and negative signals when the position sensor is differential and provides them. Use one twisted pair for each differential group of signals as follows: A1+/DAT1+ with A1-/DAT1-, B1+/CLK1+ with B1-/CLK1-, Z1+ with Z1-, A2+/DAT2+ with A2-/DAT2- and B2+/CLK2+ with B2-/CLK2-. Use another twisted pair for the 5V supply and GND.

b) Always use shielded cables to avoid capacitive-coupled noise when using single-ended encoders or Hall sensors with cable lengths over 1 meter. Connect the cable shield to the GND, at both ends.

c) If the +5V supply output is used by another device (like for example an encoder) and the connection cable is longer than 5 meters, add a decoupling capacitor near the supplied device, between the +5V and GND lines. The capacitor value can be 1...10 µF, rated at 6.3V.

3.15 Power Supply Connection

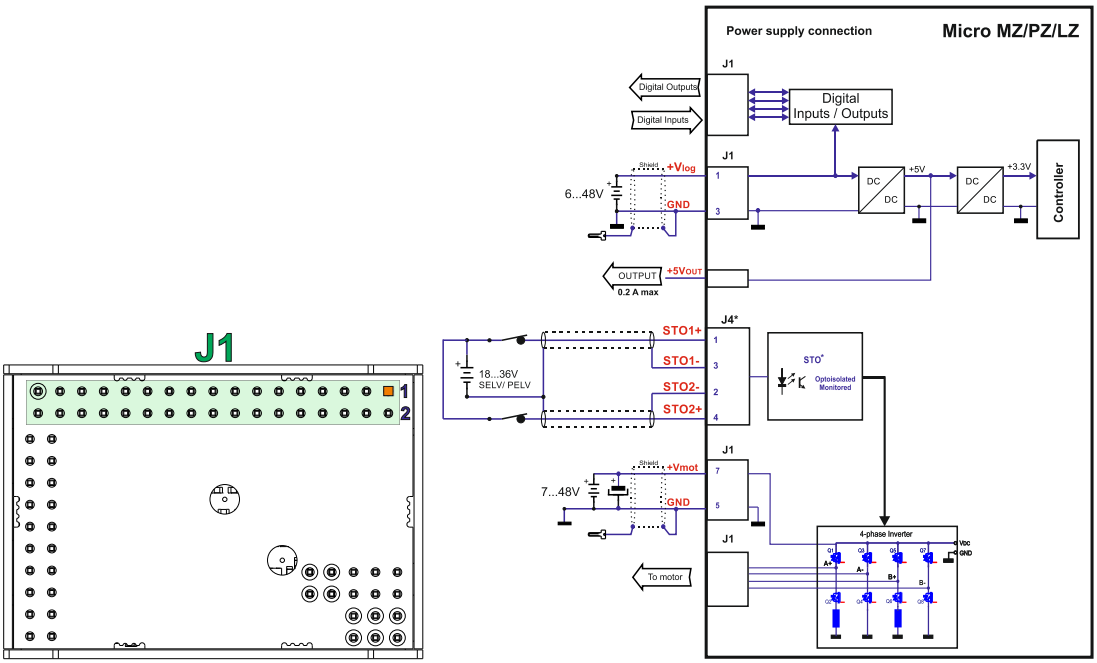

Figure 3-61 **Supply connection for Micro MZ/PZ/LZ**

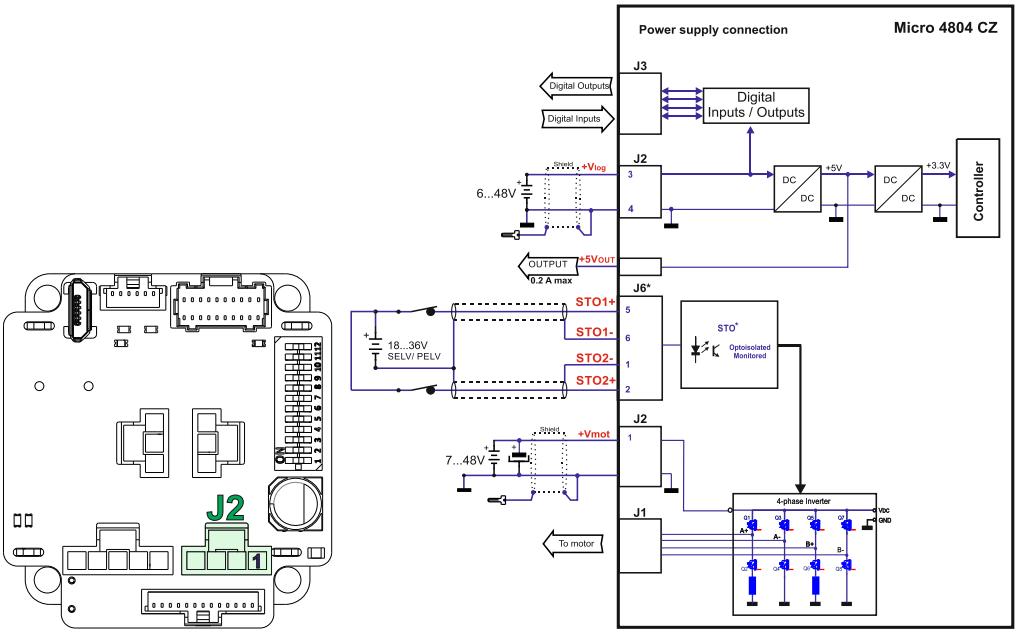

Figure 3-62 **Supply connection for Micro 4804 CZ**

Remarks:

1. *The Micro 4804 requires two supply voltages: $+V_{LOG}$ for logic power and $+V_{MOT}$ for motor power.*
2. **A third supply voltage is needed for the STO circuit, applicable only to the STO executions.*
3. *The STO and $+V_{LOG}$ inputs can share the same power source if the supply voltage ranges between 18 to 36V DC and is provided by a SELV/PELV power supply.*
4. *When the STO inputs are left unconnected, the motor outputs will be disabled. This provides a dual redundant hardware protection that cannot be overdriven by the software or other hardware components.*
5. *To enable PWM output, the STO circuit must receive a minimum of 18V.*
6. *An external electrolytic capacitor may be added between $+V_{MOT}$ and GND, to help reduce over-voltage during load braking/ reversals. For more details, refer to paragraph 3.15.1.2.*

3.15.1.1 Recommendations for Supply Wiring

a) Use short, thick wires between the Micro 4804 and the motor power supply. Connect power supply wires to all the indicated pins. If the wires are longer than 2 meters, use twisted wires for the supply and ground

return. For wires longer than 20 meters, add a capacitor of at least 1000μF (rated at an appropriate voltage) right on the terminals of the Micro 4804.

b) It is recommended to connect the negative motor supply return (GND) to the Earth protection near the power supply terminals.

c) The logic and motor power supply cables shield must be connected to GND at both ends.

3.15.1.2 Recommendations to limit over-voltage during braking

During abrupt motion brakes or reversals the regenerative energy is injected into the motor power supply. This may cause an increase of the motor supply voltage (depending on the power supply characteristics). If the voltage bypasses 60V, the drive over-voltage protection is triggered and the drive power stage is disabled.
In order to avoid this situation you have 2 options:

1. ***Add a capacitor on the motor supply*** big enough to absorb the overall energy flowing back to the supply. The capacitor must be rated to a voltage equal or bigger than the maximum expected over-voltage and can be sized with the formula:

$$C \geq \frac{2 \times E_M}{U_{MAX}^2 - U_{NOM}^2}$$

where:

U_{MAX} = 60V is the over-voltage protection limit
U_{NOM} is the nominal motor supply voltage
E_M = the overall energy flowing back to the supply in Joules. In case of a rotary motor and load, E_M can be computed with the formula:

$$E_M = \underbrace{\frac{1}{2}(J_M + J_L)\varpi_M^2}_{\textit{Kinetic energy}} + \underbrace{(m_M + m_L)g(h_{initial} - h_{final})}_{\textit{Potential energy}} - \underbrace{3I_M^2 R_{Ph} t_d}_{\textit{Copper losses}} - \underbrace{\frac{t_d \varpi_M}{2} T_F}_{\textit{Friction}}$$

where:

J_M – total rotor inertia [kgm^2]
J_L – total load inertia as seen at motor shaft after transmission [kgm^2]
ϖ_M – motor angular speed before deceleration [rad/s]
m_M – motor mass [kg] – when motor is moving in a non-horizontal plane
m_L – load mass [kg] – when load is moving in a non-horizontal plane
g – gravitational acceleration i.e. 9.8 [m/s^2]
$h_{initial}$ – initial system altitude [m]
h_{final} – final system altitude [m]
I_M – motor current during deceleration [A_{RMS}/phase]
R_{Ph} – motor phase resistance [Ω]
t_d – time to decelerate [s]
T_F – total friction torque as seen at motor shaft [Nm] – includes load and transmission

In case of a linear motor and load, the motor inertia J_M and the load inertia J_L will be replaced by the motor mass and the load mass measured in [kg], the angular speed ϖ_M will become linear speed measured in [m/s] and the friction torque T_F will become friction force measured in [N].

Example : Gravitational load, negligible rotational inertia, negligible friction and losses.
A load with a combined mass of m_M+m_L=1.02Kg is to be dropped $h_{INITIAL}$-h_{FINAL}=m in t_D=0.1s.
Assuming a nominal voltage of 48 V + 5% (approximately 50 V), and for the Micro series with a maximum voltage of 60 V, the minimum required capacitance is 18.1 mF.
Capacitor selection: Choose a capacitor of at least 22 mF (±15%) or higher, rated for 63 V.

2. ***Connect a chopping resistor R_{CR}*** between phase CR / B- and ground, and activate the software option of dynamic braking (see below).

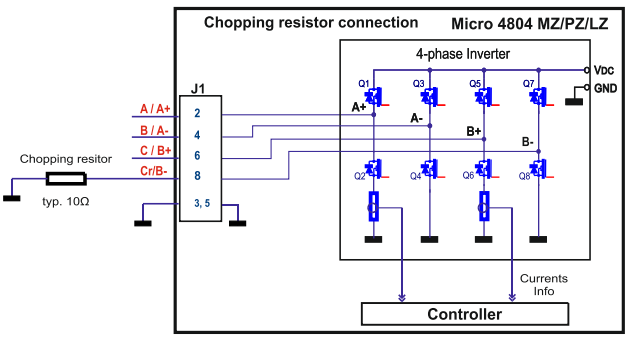

Figure 3-63 **Chopping resistor connection for Micro 4804 MZ/PZ/LZ**

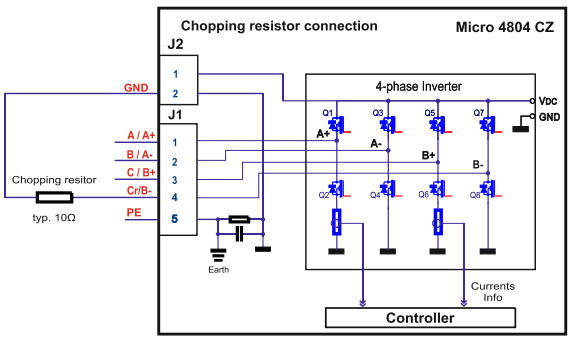

Figure 3-64 **Chopping resistor connection for Micro 4804 CZ**

Remark: This option is not available when the drive is used with a step motor.

The chopping resistor option can be found in the Drive Setup dialogue within EasyMotion / EasySetUp:

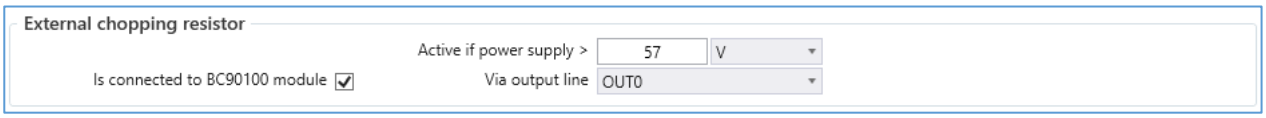

The chopping will occur when DC bus voltage increases over U_{CHOP}. This parameter (U_{CHOP}) should be adjusted depending on the nominal motor supply. Optimally (from a braking point of view), U_{CHOP} should be a few volts above the maximum nominal supply voltage. This setting will activate the chopping resistor earlier, before reaching dangerous voltages – when the over-voltage protection will stop the drive. Of course, U_{CHOP} must always be less than U_{MAX} – the over-voltage protection threshold.

Remark: *This option can be combined with an external capacitor whose value is not enough to absorb the entire regenerative energy E_M but can help reducing the chopping resistor size.*

The BC90100 module (P038.100.E201) is a brake chopper module compatible with all Technosoft Intelligent drives, supporting up to 160A. For more details, refer to the "BC90100 brake chopper module datasheet" (codified as P038.100.E201.DSH.xx).

Chopping resistor selection

The chopping resistor value must be chosen to respect the following conditions:

1. to limit the maximum current below the drive peak current I_{PEAK} = 16A

$$R_{CR} > \frac{U_{MAX}}{I_{PEAK}}$$

2. to sustain the required *braking power*:

$$P_{CR} = \frac{E_M - \frac{1}{2}C(U_{MAX}^2 - U_{CHOP}^2)}{t_d}$$

where C is the capacitance on the motor supply (external), i.e:

$$R_{CR} < \frac{U_{CHOP}^2}{2 \times P_{CR}}$$

3. to limit the average current below the drive nominal current I_{NOM}=8A

$$R_{CR} > \frac{P_{CR} \times t_d}{t_{CYCLE} \times I_{NOM}^2}$$

where t_{CYCLE} is the time interval between 2 voltage increase cycles in case of repetitive moves.

4. to be rated for an average power $P_{AV} = \frac{P_{CR} \times t_d}{t_{CYCLE}}$ and a peak power $P_{PEAK} = \frac{U_{MAX}^2}{R_{CR}}$

Remarks:

1. *If $\frac{U_{MAX}}{I_{PEAK}} > \frac{U_{CHOP}^2}{2 \times P_{CR}}$ the braking power P_{CR} must be reduced by increasing either t_d – the time to decelerate or C – the external capacitor on the motor supply*
2. *If $\frac{P_{CR} \times t_d}{t_{CYCLE} \times I_{NOM}^2} > \frac{U_{CHOP}^2}{2 \times P_{CR}}$ either the braking power must be reduced (see Remark 1) or t_{CYCLE} – the time interval between chopping cycles must be increased*

Example: Smaller Capacitor with Resistor for Dissipation

Continuing from the previous example, consider using a physically smaller capacitor with C=1mF. Assuming a cycle time of t_{CYCLE}=1s, and for the Micro PZ a peak current of I_{PEAK}=16A. We'll configure the chopping voltage to U_{CHOP}=51V.

Resulting power dissipation is approximately P_{CR}≈95W.

The resistor must satisfy the conditions: greater than 3.75Ω, greater than 0.15Ω, and less than 13.7Ω.

Resistor selection: Choose a resistor of R_{CR}=10Ω.

Power dissipation: The peak dissipation will be P_{PEAK}=360W, average dissipation will be P_{AV}≈9.5W.

	WARNING!	***THE CHOPPING RESISTOR MAY HAVE HOT SURFACES DURING OPERATION.***

3.16 USB connection

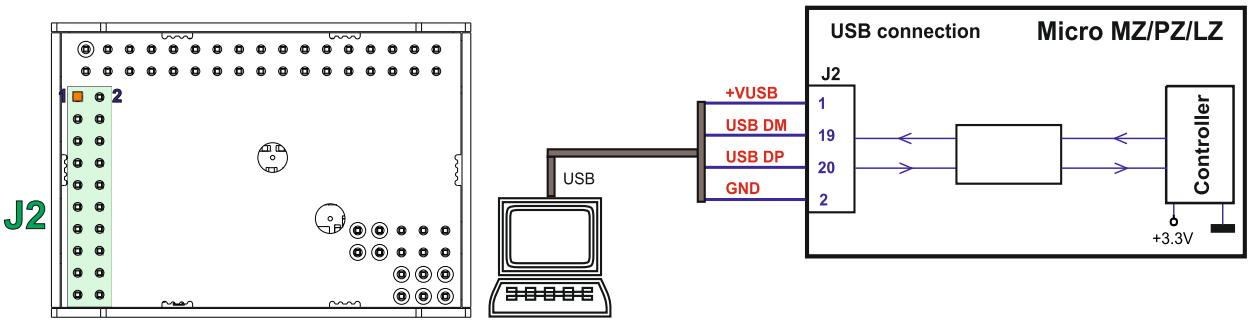

Figure 3-65 **USB connection for Micro MZ/PZ/LZ**

For Micro MZ/PZ/LZ, high-speed signals (USB DP, USB DM) must be routed as differential pairs, with controlled impedance, microstrip or stripline with 90 ohm differential characteristic impedance.

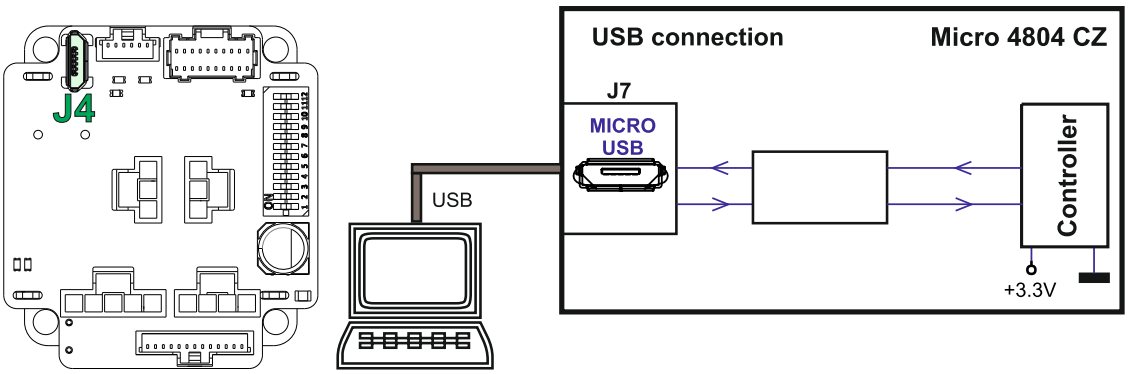

Figure 3-66 **USB connection for Micro 4804 CZ**

For the USB connection a standard USB cable is required. The drivers are found automatically in Windows 10 and the device is identified as a COM port.

Remark:

1. *EasyMotion Studio can communicate either with RS232 or USB communication (not both at the same time).*
2. *EasyMotion Studio can communicate in parallel with RS232/USB communication while CAN or EtherCAT communication is active.*

3.17 Serial RS-232 connection

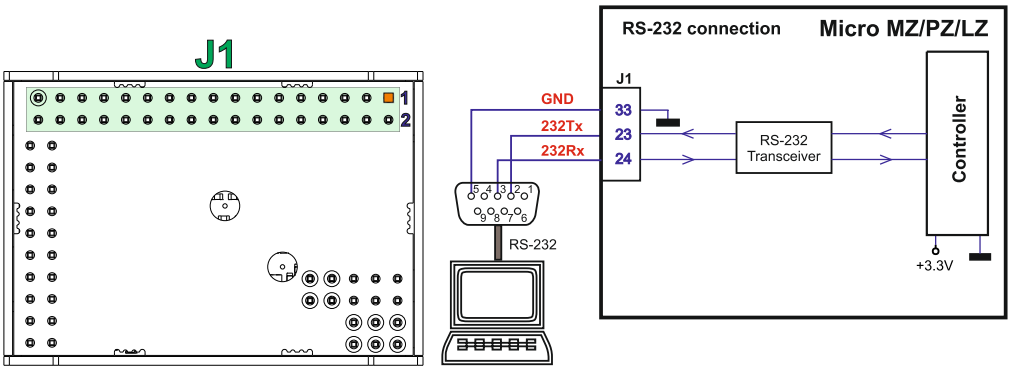

Figure 3-67. ***Serial RS-232 connection for Micro MZ/PZ***

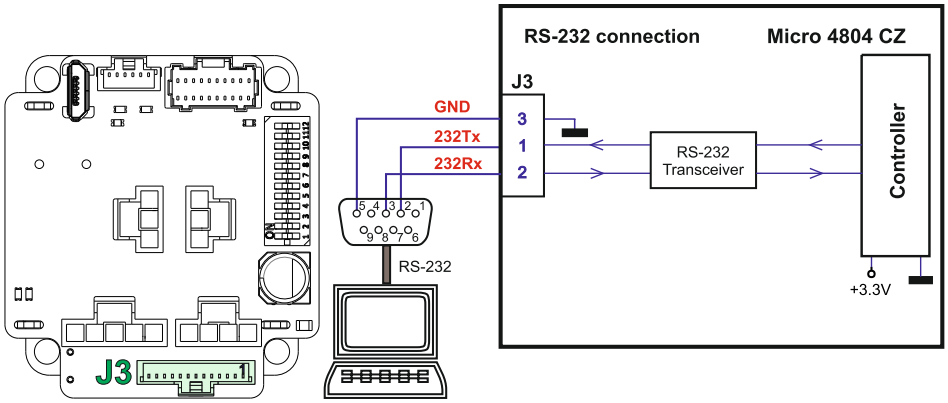

Figure 3-68. ***Serial RS-232 connection for Micro 4804 CZ***

Remark:

1. *EasyMotion Studio can communicate either with RS232 or USB communication (not both at the same time).*
2. *EasyMotion Studio can communicate in parallel with serial RS232 communication while CAN or EtherCAT communication is active.*

3.17.1.1 Recommendation for wiring

b) If you build the serial cable, you can use a 3-wire shielded cable with shield connected to BOTH ends. Do not use the shield as GND. The ground wire must be included inside the shield, like the 232Rx and 232Tx signals.
c) Always power-off all the Micro supplies before inserting/removing the RS-232 serial connector
d) Do not rely on an earthed PC to provide the Micro 4804 GND connection! The drive must be earthed through a separate circuit. Most communication problems are caused by the lack of such connection.

CAUTION! **DO NOT CONNECT/DISCONNECT THE RS-232 CABLE WHILE THE DRIVE IS PWERED ON. THIS OPERATION CAN DAMAGE THE DRIVE**

3.18 CAN-bus connection

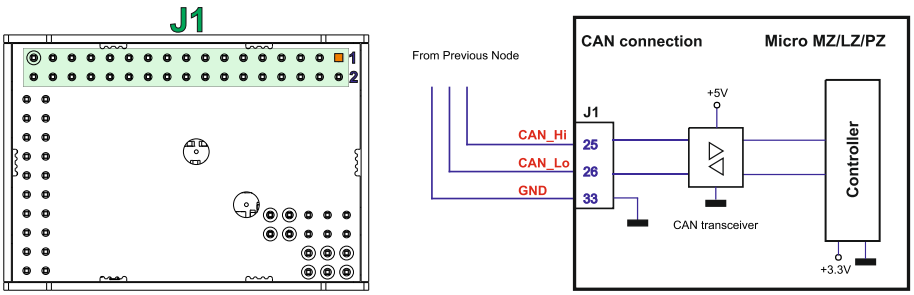

Figure 3-69. ***CAN connection for Micro MZ/PZ/LZ - CAN***

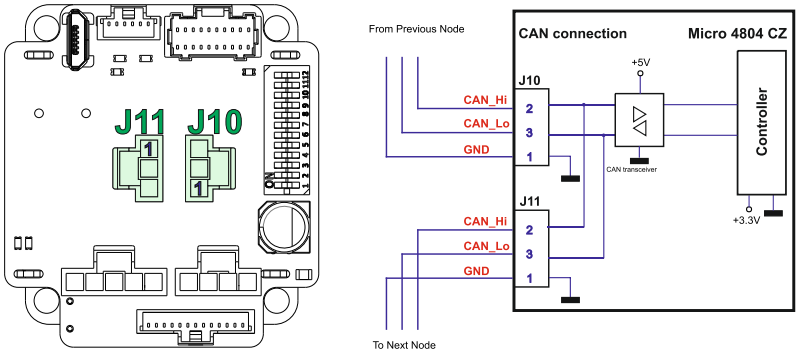

*Figure 3-70. **CAN connection for Micro 4804 CZ - CAN***

Remarks:

1. *A 120Ω terminator is required on the CAN network for proper operation. The Micro MZ, PZ, and LZ models do not include this terminator. On the Micro 4804 CZ model, the terminator can be enabled by setting SW1 position 12 to 'ON,' connecting it between the CAN-Hi and CAN-Lo signals.*
2. *CAN signals are not isolated from other Micro 4804 circuits.*
3. *EasyMotion Studio can communicate in parallel via RS-232 or USB while CAN communication is active*

3.18.1.1 Recommendation for wiring

a) Build CAN network using cables with twisted wires (2 wires/pair), with CAN-Hi twisted together with CAN-Lo. It is recommended but not mandatory to use a shielded cable. If so, connect the shield to GND. The cable impedance must be 105 ... 135 ohms (120 ohms typical) and a capacitance below 30pF/meter.
b) When using a printed circuit board (PCB) motherboard based on FR-4 material, build the CAN network using a pair of 12mil (0.012") tracks, spaced 8 to 10mils (0.008"…0.010") apart, placed over a local ground plane (microstrip) which extends at least 1mm left and right to the tracks.
c) Whenever possible, use daisy-chain links between the CAN nodes. Avoid using stubs. A stub is a "T" connection, where a derivation is taken from the main bus. When stubs can't be avoided keep them as short as possible. For 1 Mbit/s (worst case), the maximum stub length must be below 0.3 meters.
d) The 120Ω termination resistors must be rated at 0.2W minimum. Do not use winded resistors, which are inductive.

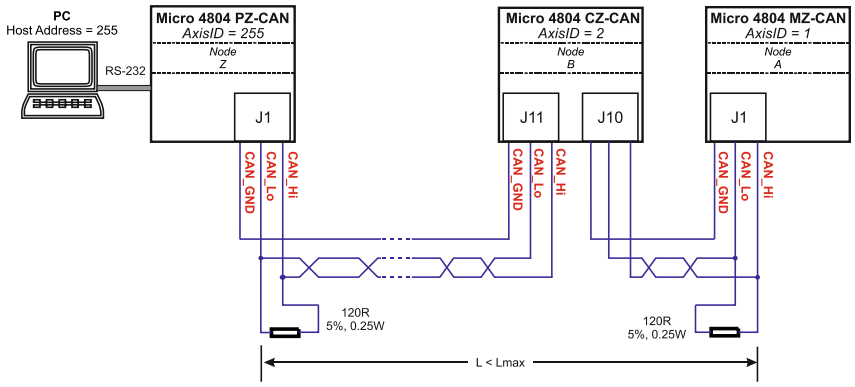

*Figure 3-71. **Multiple-Axis CAN network***

3.19 EtherCAT Connection

3.19.1 Recommendations for EtherCAT Wiring

- Build EtherCAT® network using UTP (unshielded twisted pair) cables rated CAT5E or higher (CAT6, etc.). Cables with this rating must have multiple characteristics, as described in TIA/EIA-568-B. Among these are: impedance, frequency attenuation, cross-talk, return loss, etc.
- It is acceptable to use STP (shielded twisted pair) or FTP (foil twisted pair) cables, rated CAT5E or higher (CAT6, etc.). The added shielding is beneficial in reducing the RF (radio-frequency) emissions, improving the EMC emissions of the application.
- The maximum length of each network segment must be less than 100 meters.
- The network topology is daisy-chain. All connections are done using point-to-point cables. The global topology can be one of the two:

- Linear, when the OUT port of the last drive in the chain remains not connected. Master is connected to IN port of the first drive; OUT of the first drive is connected to IN of the following drive; OUT of the last drive remains unconnected. See
- *Figure 3-72* for a visual representation of the linear topology.
- Ring, when the OUT port of the last drive in the chain is connected back to the master controller, on the 2nd port of the master. This topology consists of the linear topology described above, plus an extra connection between the master, which has two RJ45 ports, to OUT of the last drive. See
- *Figure 3-73* for a visual representation of the ring topology.

- Ring topology is preferred for its added security, since it is insensitive to one broken cable / connection along the ring (re-routing of communication is done automatically, so that to avoid the broken cable / connection)
- It is highly recommended to use qualified cables, assembled by a specialized manufacturer. When using CAT5E UTP cables that are manufactured / commissioned / prepared on-site, it is highly recommended to check the cables. The check should be performed using a dedicated Ethernet cable tester, which verifies more parameters than simple galvanic continuity (such as cross-talk, attenuation, etc.). The activation of "Link" indicators will NOT guarantee a stable and reliable connection! This can only be guaranteed by proper quality of cables used, according to TIA/EIA-568-B specifications.

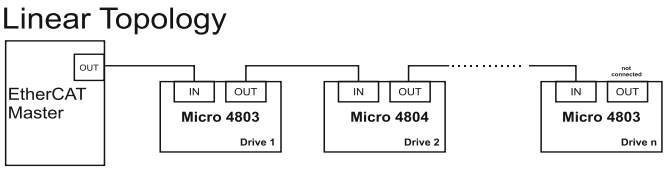

Figure 3-72 **EtherCAT network linear topology**

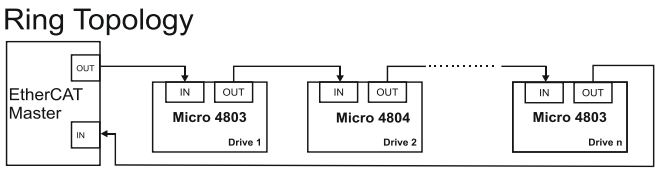

Figure 3-73 **EtherCAT network ring topology**

Remark: *EasyMotion Studio can communicate via RS232 or USB while EtherCAT communication is active.*

3.19.2 EtherCAT signals schematic considerations

- Ports cannot be swapped. Port IN (0) must be always used for connection, while port OUT (1) can be optionally left disconnected (inactive). Swapping ports can lead to packet loss, see EtherCAT documentation on circulating packets.

- For both ports, transmit and receive paths can be swapped freely. For example, it is possible to swap the group (Tx0+, Tx0-) with the group (Rx0+, Rx0-). This feature, called "Auto MDI/MDI-X", is present on all EtherCAT devices. As a consequence, it is possible to connect EtherCAT devices either by patch cables (1:1 wiring), or by cross-over cables (pair 1-2 swapped with 3-6).

- For all 4 differential channels, positive and negative lines can be swapped freely. For example, it is possible to swap Tx0+ with Tx0-. This feature, makes wiring errors transparent, without any hidden consequence.

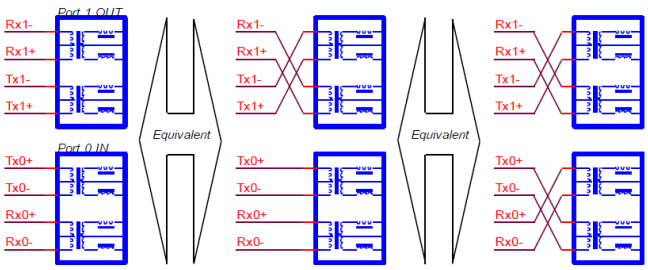

Figure 3-74 **Auto MDI/MDI-X**

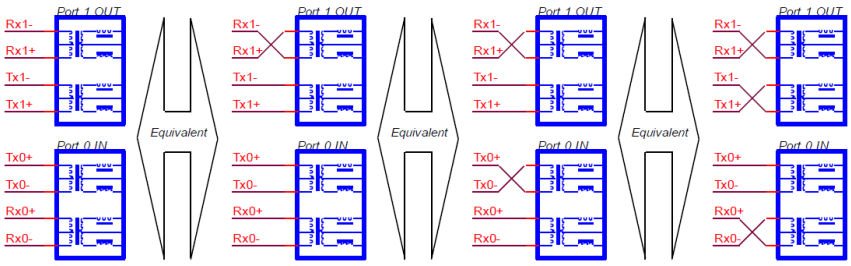

Figure 3-75 **Auto Polarity Detection and Correction**

3.20 Disabling Autorun (for CAN drives); Disabling the setup table (for CAT drives)

3.20.1 Disabling Autorun (for CAN drives)

When a Micro CAN is set to TMLCAN operation mode, it automatically enters Autorun mode by default after power-on. In this mode, if the drive's local EEPROM contains a valid TML application (motion program), it will automatically execute as soon as the motor supply (V_{MOT}) is turned on.
To disable Autorun mode, you can use one of the following methods:

a) Software - by writing value 0x0001 in first EEPROM location at address 0x2000
b) Hardware1 – set the drive temporarily in CANopen mode. While in CANopen state, no motion will autorun.
c) Hardware2 – by temporary connecting all digital Hall inputs to GND, during the power-on for about 1 second, until the green LED is turned on, as shown in Figure **3-76** and Figure **3-77**.This option is particularly useful when it is not possible to communicate with the drive.

After the drive is set in non-Autorun/slave mode using 2nd method, the 1st method may be used to invalidate the TML application from the EEPROM. On next power on, in absence of a valid TML application, the drive enters in the non-Autorun/slave mode independently of the digital Hall inputs status.

3.20.2 Disabling the setup table at startup (for CAT drives)

In rare instances, the setup table may become corrupted, causing the drive to continuously reset. This condition is indicated by both the Ready and Error LEDs blinking rapidly in succession.
To recover from this state, invalidate the setup table by connecting all digital Hall inputs to GND. Upon the next power-on, the drive will load the default settings and set bit 2 in the Motion Error Register, indicating “Invalid Setup Data.” Once a new valid setup table is loaded onto the drive, disconnect the Hall sensors from GND and perform another power cycle (power off and then on).

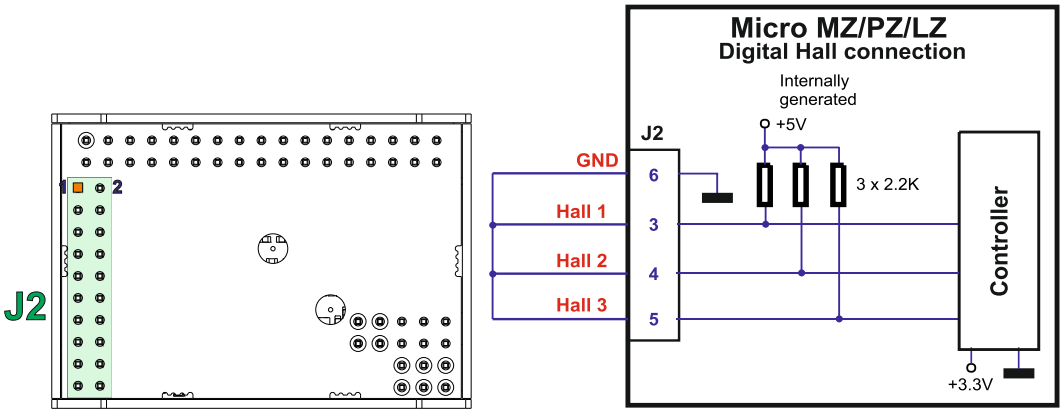

Figure 3-76 **Temporary connection during power-on to invalidate the Setup table for Micro MZ/PZ/LZ**

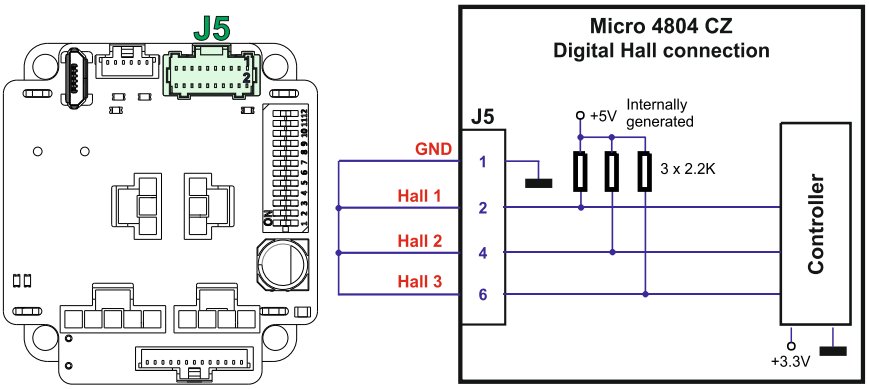

Figure 3-77 **Temporary connection during power-on to invalidate the Setup table for Micro 4804 CZ**

3.21 LED Indicators

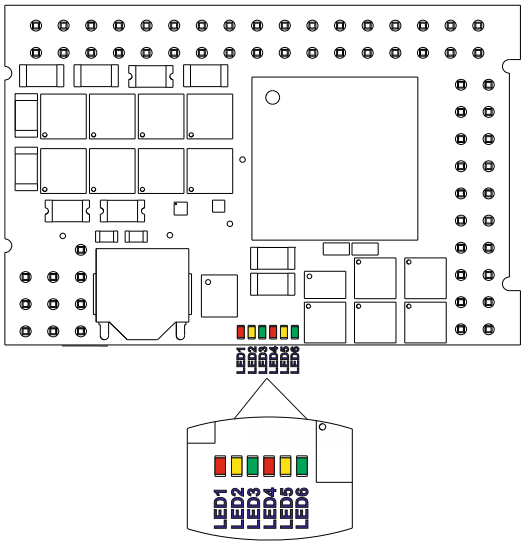

Figure 3-78 **LED indicators for Micro MZ/LZ**

Table 1- **LED indicators description for Micro MZ/LZ**

No.	Name	Color	Description
LED1	TML ERR	RED	Turned on when the drive detects an error condition.
LED2	ECAT ACT1	YELLOW	Shows the state of the physical link and activity for ECAT IN and OUT ports.
LED3	TML RDY	GREEN	Lit after power-on when the drive initialization ends. Turned off when an error occurs.
LED4	ECAT ERR	RED	EtherCAT® ERROR indicator.
LED5	ECAT ACT0	YELLOW	Shows the state of the physical link and activity for ECAT IN and OUT ports.
LED6	ECAT RUN	GREEN	EtherCAT® RUN indicator.
LED2, LED4, LED5 and LED6 are not used for the CAN version			

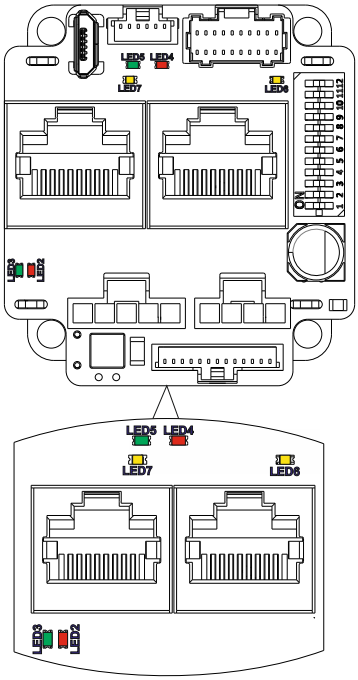

Figure 3-79 **LED indicators for Micro 4804 CZ**

Table 2- **LED indicators description for Micro 4804 CZ**

No.	Name	Color	Description
LED2	TML ERR	RED	Turned on when the drive detects an error condition.
LED3	TML RDY	GREEN	Lit after power-on when the drive initialization ends. Turned off when an error occurs.
LED4	ECAT ERR	RED	EtherCAT® ERROR indicator.
LED5	ECAT RUN	GREEN	EtherCAT® RUN indicator.
LED6	ECAT ACT0	YELLOW	Shows the state of the physical link and activity for ECAT IN and OUT ports.
LED7	ECAT ACT1	YELLOW	
LED4, LED5, LED6 and LED7 are not used for the CAN version			

3.21.1 EtherCAT® RUN and ERROR LED Indicators

The RUN states are displayed with a 180 degree phase shift to the ERROR states as noted in Figure 3-80. STATUS indicator Example.

The behavior of the RUN indicator is specified in Table 3. RUN Indicator States" and the behavior of the ERROR indicator specified in Table 4. ERROR Indicator States".

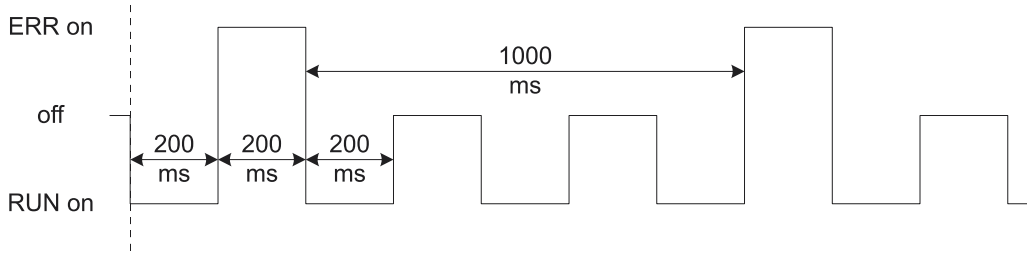

Figure 3-80. *STATUS indicator Example*

Table 3. *RUN Indicator States*

Indicator states	Slave State	Description
Off	INITIALISATION	The drive is in state INIT
Blinking	PRE-OPERATIONAL	The drive is in state PRE-OEPRATIONAL
Single Flash	SAFE-OPERATIONAL	The drive is in state SAFE-OPERATIONAL
On	OPERATIONAL	The drive is in state OPERATIONAL

Table 4. *ERROR Indicator States*

ERR state	Error name	Description
On	Application controller failure	An critical communication or application controller error has occurred
Double Flash	Process Data Watchdog Timeout/ EtherCAT Watchdog Timeout	An application watchdog timeout has occurred.
Single Flash	Local Error	Slave device application has changed the EtherCAT state autonomously, due to local error (see ETG.1000 part 6 EtherCAT State Machine). Error Indicator bit is set to 1 in AL Status register.
Blinking	Invalid Configuration	General Configuration Error
Flickering	Booting Error	Booting Error was detected. INIT state reached, but Error Indicator bit is set to 1 in AL Status register
Off	No error	The EtherCAT communication of the device is in working condition

For a more detailed description of EtherCAT® LED functionalities please read ETG.1300 S (R) V1.0.1 available at www.EtherCAT.org

3.22 Axis ID Selection and Operation Mode

3.22.1 Axis ID Selection for Micro MZ/LZ/PZ - CAT

The **Micro MZ/PZ/LZ - CAT** drive support all EtherCAT standard addressing modes. In case of device addressing mode based on node address, the drive sets the *configured station alias* address with its AxisID value. The drive's AxisID value is configured after power-on by one of the following methods:

- **Software**, Using EasyMotion Studio II, set a specific AxisID value in the range of 1-255 within the AxisID settings under the setup section.

- **Hardware**, In EasyMotion Studio II, select the 'H/W' option under AxisID settings in the setup section, then choose a value between 1 and 255 using the following 3 dedicated analog input pins:
 - J1 pin 21, signal name ID0
 - J1 pin 22, signal name ID1
 - J1 pin 10, signal name ID2

These three inputs are sampled after every reset, including after power-up. The voltages on these pins are interpreted according to the table "Table 5 – AxisID register" below. Each input is divided into 8 intervals, which are encoded in binary, resulting in 3 bits.

Table 5- **AxisID Register for Micro MZ/PZ/LZ - CAT**

MSB			AxisID register					LSB
Bit 8	Bit 7	Bit 6	Bit 5	Bit 4	Bit 3	Bit 2	Bit 1	Bit 0
ID2			ID1			ID0		

Nominal[V]	Minimum[V]	Maximum[V]	IDx* Bits	IDx* Value
0.000	0.00	0.53	000	**0**
1.06	0.53	1.41	001	**1**
1.76	1.41	2.01	010	**2**
2.25	2.01	2.43	011	**3**
2.60	2.43	2.75	100	**4**
2.89	2.75	3.01	101	**5**
3.13	3.01	3.22	110	**6**
3.32	3.22	3.30	111	**7**
AxisID = 64*(ID2 Value) + 8*(ID1 Value) + (ID0 Value)				

*where ”x” can be 1, 2 or 3

Remarks:

1. *The drive's axis or address number is determined by the hardware pins when 'H/W' is selected in the Drive Setup under the AxisID field, or when the setup is invalid.*
2. *If all “IDx” pins are left not connected or connected to GND, the AxisID value is 255 and the EtherCAT register called “configured station alias” will be 0.*
3. *Bit 8 (MSB of ID2) is ignored, and always considered as “0”.*
4. *All pins are sampled at power-up, and the drive is configured accordingly.*

3.22.2 Axis ID Selection for Micro MZ/PZ/LZ - CAN

The drive's AxisID value is configured after power-on by one of the following methods:

- **Software**, Using EasyMotion Studio II, set a specific AxisID value in the range of 1-255 within the AxisID settings under the setup section.

- **Hardware**, In EasyMotion Studio II, select the 'H/W' option under AxisID settings in the setup section, then choose a value between 1 and 255 using the following 3 dedicated analog input pins:
 - J1 pin 21, signal name ID0
 - J1 pin 22, signal name ID1
 - J1 pin 10, signal name ID2

These three inputs are sampled after every reset, including after power-up. The voltages on these pins are interpreted according to the table "Table 5 – AxisID register" below. Each input is divided into 8 intervals, which are encoded in binary, resulting in 3 bits.

Table 6- **AxisID Register for Micro MZ/PZ/LZ - CAN**

MSB			AxisID register					LSB
Bit 8	Bit 7	Bit 6	Bit 5	Bit 4	Bit 3	Bit 2	Bit 1	Bit 0
ID2			ID1			ID0		

Nominal[V]	Minimum[V]	Maximum[V]	IDx* Bits	IDx* Value
0.000	0.00	0.53	**000**	**0**
1.06	0.53	1.41	**001**	**1**
1.76	1.41	2.01	**010**	**2**
2.25	2.01	2.43	**011**	**3**
2.60	2.43	2.75	**100**	**4**
2.89	2.75	3.01	**101**	**5**
3.13	3.01	3.22	**110**	**6**
3.32	3.22	3.30	**111**	**7**
TMLCAN mode**: AxisID = (64*ID2_Value - 128) + (8*ID1_Value) + ID0_Value**				
CANopen mode**: AxisID = (64*ID2_Value) + (8*ID1_Value) + ID0_Value**				

*where ”x” can be 1, 2 or 3

Remarks:

1. *If **Bit 7 (ID2) = 1** -> **TMLCAN** mode is selected.*
2. *If **Bit 7 (ID2) = 0** -> **CANopen** mode is selected.*
3. *Bit 8 (MSB of ID2) is ignored, and always considered as “0”.*
4. *The maximum AxisID value is 127 (Bit 0 … Bit 6).*

5. *If all "IDx" pins are left not connected or connected to GND, the AxisID value is 255 and CANopen mode is selected. In this case, the drive will be in "LSS inactive" state and the Green LED will flash at 1 second intervals*

** where "x" can be 1, 2 or 3*

3.22.3 Hardware Axis ID implementation for Micro MZ/PZ/LZ

To achieve the voltage levels outlined in sections 3.23.1 and 3.23.2, it is recommended to utilize resistive voltage dividers, as illustrated in the figure below. The resistors should have a tolerance of 1% or better.

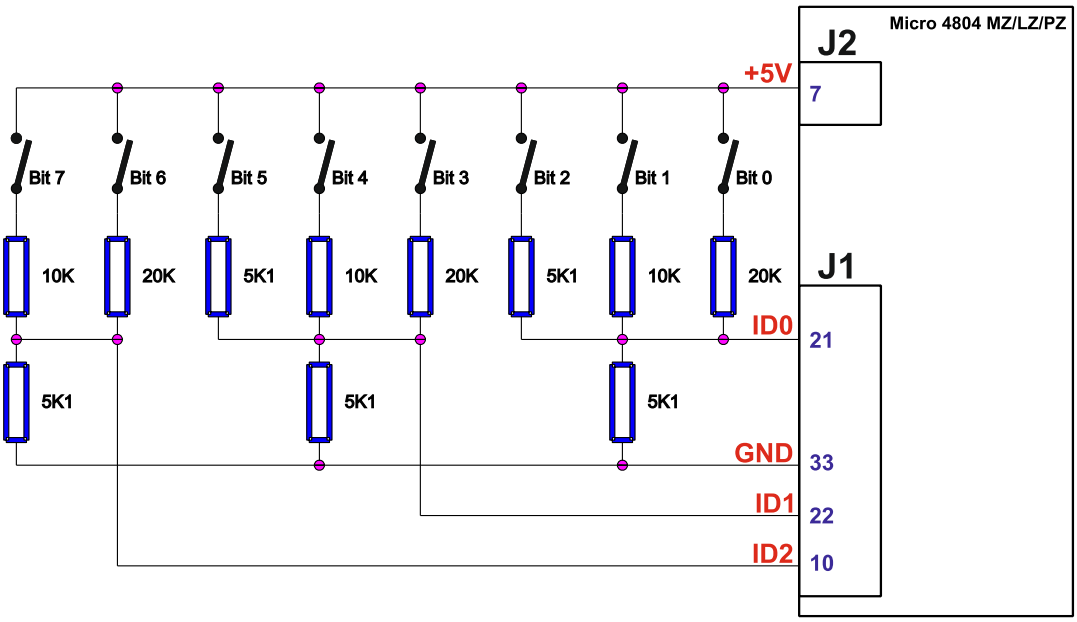

Figure 3-81. *AxisID connection – Single Axis*

When multiple drives are located on the same mainboard PCB, it is generally preferable to assign them consecutive addresses while maintaining a way to define the "block" or "global" address prefix. For instance, with seven drives on the same mainboard, you might assign them one of the following address ranges: 1–7, 9–15, 17–23, ..., 121–127 (maximum for CANopen), 129–135, ..., or 249–255 (maximum for TMLcan and EtherCAT). This can be achieved using the recommended schematic shown in the figure below.

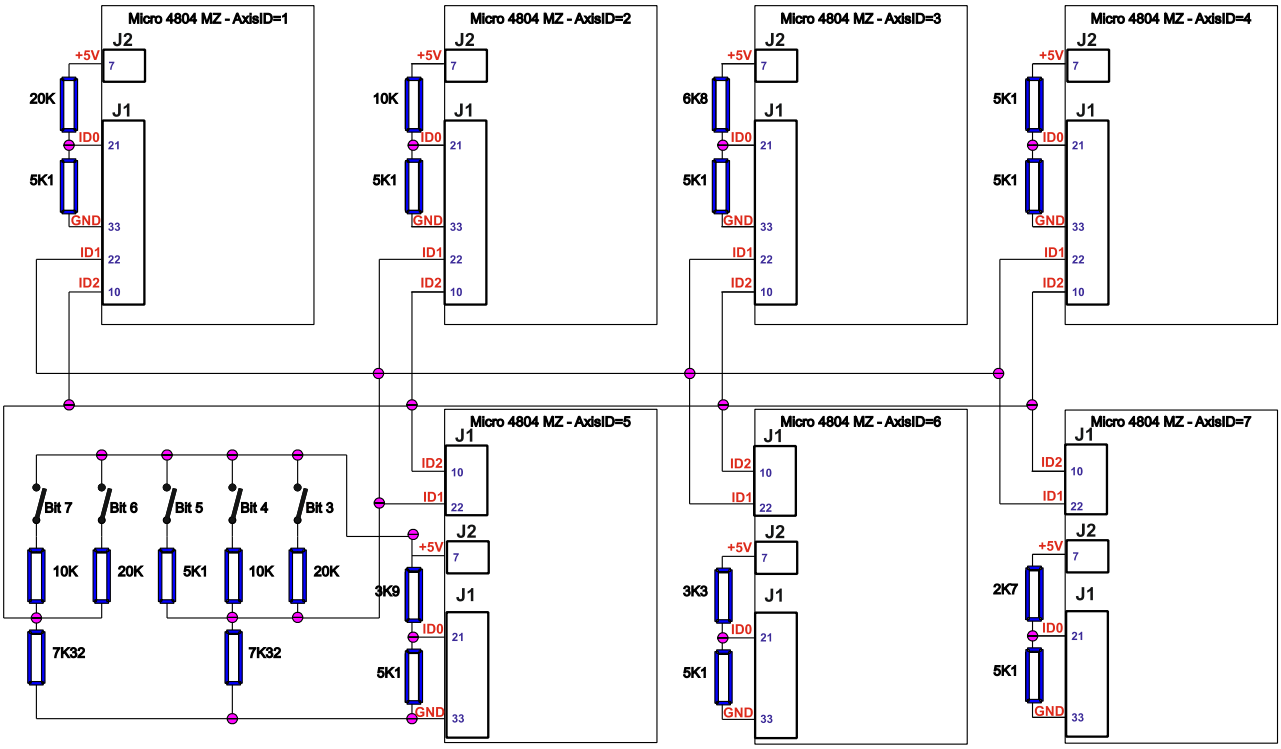

Figure 3-82. *AxisID connection – Multi-Axis*

This schematic highlights several important considerations:

1. Resistive Dividers for "Block" / "Global" Address Prefix:

- The resistive dividers shared across multiple drives to define the "block" or "global" address prefix must be powered by +5V from a single drive. The specific drive providing power is not critical.

2. Pull-Down Resistor Adjustments for Multiple Drives:

- The shared resistive dividers must use a different pull-down resistor (connected to ground) than the single-drive value of 5.1 kΩ.
- This adjustment is required because each drive has an internal pull-down impedance of 100 kΩ. When drives are connected in parallel, the equivalent internal impedance decreases.
- For a single drive, the combination of the external 5.1 kΩ pull-down and the internal 100 kΩ impedance results in a target value of ~4.85 kΩ. This same target must be maintained for multiple drives.
- For example, with seven drives, the equivalent impedance becomes $\frac{100}{7} \parallel 7.32 \approx 4.84\,k\Omega$.

The recommended pull-down resistor values based on the number of drives are shown in the table below:

Table 7- **Recommended Pull-Down Resistor Values Based on Number of Parallel Drives**

No. of drives	Pull-down resistor (kΩ)
1	5.10 kΩ
2	5.36 kΩ
3	5.62 kΩ
4	6.04 kΩ
5	6.34 kΩ
6	6.81 kΩ
7	7.32 kΩ
8	7.87 kΩ

3. Use of Fixed Resistive Dividers Without Switches:

- Parallel combinations of resistors can be replaced with a single resistor, as shown in the table below:

Table 8- **Equivalent Single Resistors for Common Pull-Up Combinations**

Pull-Up Resistor Combination (kΩ)	Equivalent Single Pull-Up Resistor (kΩ)	Decimal Value
20 ‖ 10	6.8	3
20 ‖ 5.1	3.9	5
10 ‖ 5.1	3.3	6
20 ‖ 10 ‖ 5.1	2.7	7

4. Special Case for Decimal Value 0 (Binary 000):

- For this setting, the voltage interval starts at 0V. No pull-up resistor is required (pull-up = infinite).
- The pull-down resistor can have any value, including 0 (direct strap to GND) or none (infinite, as the internal 100 kΩ impedance will suffice).

5. Voltage Limitations for Decimal Value 7 (Binary 111):

- The voltage interval ends at 3.35V, which is the maximum allowable voltage for AxisID inputs.
- Exceeding 3.35V can cause drive damage. Ensure that external resistive dividers do not exceed this limit.
- **Warning:** Overvoltage will destroy the drive.

6. Sensitivity to EMC and ESD:

- AxisID inputs are highly sensitive to electromagnetic compatibility (EMC) and electrostatic discharge (ESD).
- Avoid exposing PCB tracks to external touch. Place traces on inner or bottom layers whenever possible to minimize accidental contact risks.

7. Avoid Filtering Capacitors on AxisID Inputs:

- Filtering capacitors delay the settling time during power-up, potentially causing incorrect AxisID settings. Do not add capacitors to these inputs.

8. Voltage for Calculations:

- Assume that the +5V generated by the drive is 5.20V. Additional details are available in the electrical characteristics table.

3.22.4 Axis ID Selection for Micro 4804 CZ - CAT

The **Micro 4804 CZ - CAT** drive support all EtherCAT standard addressing modes. In case of device addressing mode based on node address, the drive sets the *configured station alias* address with its AxisID value. The drive's AxisID value is configured after power-on by one of the following methods:
- **Software**, using EasyMotion Studio II, set a specific AxisID value in the range of 1-255 within the AxisID settings under the setup section.
- **Hardware**, in EasyMotion Studio II, select the 'H/W' option under AxisID settings in the setup section, then choose a value between 1 and 255 using SW1.

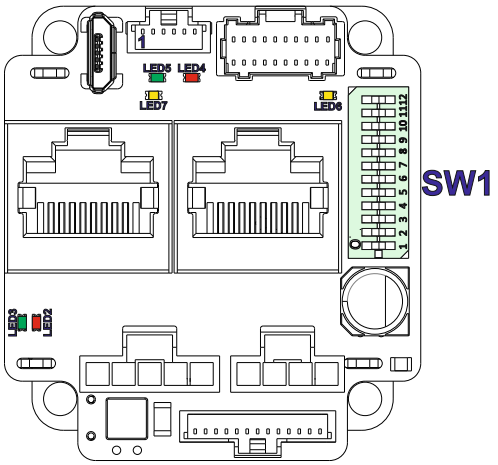

Figure 3-83 **Sliding switch for Micro 4804 CZ-CAT**

SW1

MSB					LSB
AxisID register					
Bit 7	Bit 4	Bit 3	Bit 2	Bit 1	Bit 0

Position	Description	
1	AxisID register Bit 0.	**ON**: Bit x = 1. **OFF**: Bit x = 0. *Possible AxisID values: 1÷31 and 128÷159.* *When all Bits are set to 0, AxisID value is 255.* *When the AxisID value is 255, the EtherCAT register called "configured station alias" will be 0*
2	AxisID register Bit 1.	
3	AxisID register Bit 2.	
4	AxisID register Bit 3.	
5	AxisID register Bit 4.	
6	AxisID register Bit 7.	

Table 9 ***Axis ID switch settings for Micro 4804 CZ-CAT***

Remarks:
1. *The drive's axis or address number is determined by the hardware pins when 'H/W' is selected in the Drive Setup under the AxisID field, or when the setup is invalid.*
2. *When Axis ID is 255, the EtherCAT register called "configured station alias" will be 0.*
3. *All pins are sampled at power-up, and the drive is configured accordingly.*

3.22.5 Axis ID Selection and Operation Mode for Micro 4804 CZ - CAN

The drive AxisID value is set after power on by:
- **Software**, using EasyMotion Studio II, set a specific AxisID value in the range of 1-255 within the AxisID settings under the setup section.
- **Hardware**, in EasyMotion Studio II, select the 'H/W' option under AxisID settings in the setup section, then choose a value between 1 and 255 using SW1.

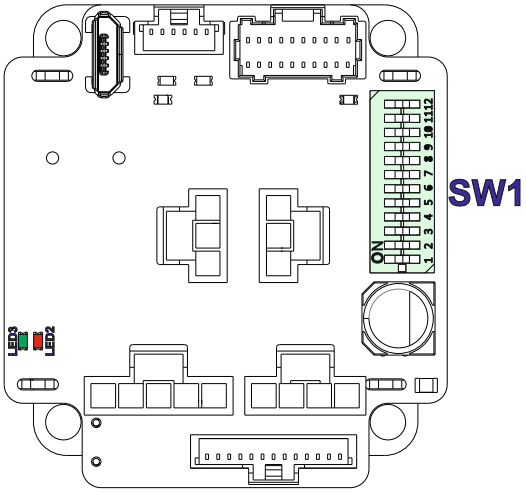

Figure 3-84 **Sliding switch for Micro 4804 CZ-CAN**

SW1

MSB				LSB
AxisID register				
Bit 4	Bit 3	Bit 2	Bit 1	Bit 0

Position	Description	
1	AxisID register Bit 0.	**ON**: Bit x = 1. **OFF**: Bit x = 0. *The maximum AxisID value is 31.* *When all Bits are set to 0, AxisID value is 255.* *In CANOpen mode, if the AxisID is set to 255, the drive enters the "LSS inactive" state. In this state, the Green LED will flash at 1-second intervals.*
2	AxisID register Bit 1.	
3	AxisID register Bit 2.	
4	AxisID register Bit 3.	
5	AxisID register Bit 4.	
6	ON = TMLCAN mode is selected OFF = CANOpen mode is selected	

Table 10 ***Axis ID switch settings for Micro 4804 CZ-CAN***

Remarks:
1. *The drive's axis or address number is determined by the hardware pins when 'H/W' is selected in the Drive Setup under the AxisID field, or when the setup is invalid.*
2. *In CANOpen mode, if the AxisID is set to 255, the drive enters the "LSS inactive" state. In this state, the Green LED will flash at 1-second intervals.*
3. *All pins are sampled at power-up, and the drive is configured accordingly.*

4 Electrical Specifications

All parameters measured under the following conditions (unless otherwise specified):

- V_{LOG} = 24 VDC; V_{MOT} = 48 VDC; F_{PWM} = 20 kHZ
- Ambient temperature = 25°C (typical values) / 0°C…40°C (min/max values)
- Supplies start-up / shutdown sequence: -any-
- Load current = nominal

4.1 Operating Conditions

		Min.	Typ.	Max.	Units
Ambient temperature		0		40[1, 2]	ºC
Ambient humidity	Non-condensing	0		90	%Rh
Altitude / pressure[3]	Altitude (vs. sea level)	-0.1	0 ÷ 2.5	[3]	Km
	Ambient Pressure	0 [2]	0.75 ÷ 1	10.0	atm

4.2 Storage Conditions

			Min.	Typ.	Max.	Units
Ambient temperature			-40		100	ºC
Ambient humidity	Non-condensing		0		100	%Rh
Ambient Pressure			0		10.0	atm
ESD capability (Human body model)	Not powered; applies to any accessible part	Micro MZ & LZ			±0.5	kV
		Micro 4804 PZ & CZ			±1.5	
	Original packaging				±15	kV

4.3 Mechanical Mounting for Micro MZ / PZ / LZ

		Min.	Typ.	Max.	Units
Airflow	natural convection[2], closed box				
Spacing required for horizontal mounting[2]	Between adjacent drives		10		mm
	Between drives and nearby walls		10		mm
	Space needed for drive removal		20		mm
	Between drives and roof-top		30		mm
Insertion force	Using recommended mating connectors			40	N
Extraction force		8			N

4.4 Mechanical Mounting for Micro 4804 CZ

		Min.	Typ.	Max.	Units
Airflow	natural convection, closed box				
Spacing required between adjacent drives		10			mm
Spacing required above drive	For counter-connectors & cable bending	30	80		

4.1 Logic Supply Input ($+V_{LOG}$)

		Min.	Typ.	Max.	Units
Supply voltage	Nominal values	6	24	48	V_{DC}
	Absolute maximum values, drive operating but outside guaranteed parameters	4.9		60	V_{DC}
	Absolute maximum values, continuous	-0.5		63	V_{DC}
Supply current	$+V_{LOG}$ = 12V		90	150	mA
	$+V_{LOG}$ = 24V		60	90	
	$+V_{LOG}$ = 48V		45	60	
Utilization category	Acc. to 60947-4-1(I_{PEAK}<=1.05*I_{NOM})	DC-1			

4.2 Motor Supply Input ($+V_{MOT}$)

		Min.	Typ.	Max.	Units
Supply voltage	Nominal values	7		48	V_{DC}
	Absolute maximum values, drive operating but outside guaranteed parameters	6		60	V_{DC}
	Absolute maximum values, continuous	-0.5		63	V_{DC}
Supply current	Idle		0.3		mA
	Operating	-16	±7	+16	A
Voltage measurement error			±0.15	±0.25	V
Utilization category	Acc. to 60947-4-1 (I_{PEAK}<=4.0*I_{NOM})	DC-3			

[1] Operating at higher temperatures is possible with reduced current and power ratings

[2] In case of forced cooling (conduction or ventilation): a) the ambient temperature requirements may be extended substantially as long as the drive (PCB) temperature is kept below 85 ºC; b) the spacing requirements can be dropped down to zero; c) the surface temperature will decrease accordingly

[3] Micro can be operated in vacuum (no altitude restriction), but at altitudes over 2,500m, current and power rating are reduced due to thermal dissipation efficiency.

4.3 Environmental Characteristics

			Min.	Typ.	Max.	Units
Size (Length x Width x Height)	Global size (Without connectors)	Micro 4804 MZ-CAN Micro 4804 MZ-CAT Micro 4804 MZ-CAN-STO Micro 4804 MZ-CAT-STO Micro 4804 LZ-CAN Micro 4804 LZ-CAT Micro 4803 MZ-CAN Micro 4803 MZ-CAT Micro 4803 LZ-CAN Micro 4803 LZ-CAT	38.1 x 25 x 9.6			mm
			~1.5 x 1 x 0.4			inch
		Micro 4804 PZ-CAN Micro 4804 PZ-CAT Micro 4804 PZ-CAN-STO Micro 4804 PZ-CAT-STO	38.3 x 26.8 x 11.3			mm
			~1.5 x 1.1 x 0.45			inch
		Micro 4804 CZ-CAN	43.5 x 40 x 22.8			mm
		Micro 4804 CZ-CAN-STO	~ 1.7 x 1.6 x 0.9			inch
		Micro 4804 CZ-CAT	43.5 x 40 x 25.4			mm
		Micro 4804 CZ-CAT-STO	~ 1.7 x 1.6 x 1			inch
Weight	Micro 4804 MZ-CAN, Micro 4804 MZ-CAT Micro 4804 LZ-CAN, Micro 4804 LZ-CAT Micro 4803 MZ-CAN, Micro 4803 MZ-CAT Micro 4803 LZ-CAN, Micro 4803 LZ-CAT		8			g
	Micro 4804 MZ-CAN-STO, Micro 4804 MZ-CAT-STO		12			
	Micro 4804 PZ -CAN, Micro 4804 PZ-CAT		22			
	Micro 4804 PZ -CAN-STO, Micro 4804 PZ-CAT-STO		26			
	Micro 4804 CZ-CAN		30.3			
	Micro 4804 CZ-CAN-STO		34.3			
	Micro 4804 CZ-CAT		38.3			
	Micro 4804 CZ-CAT-STO		42.3			
Cleaning agents	Dry cleaning is recommended		Only Water- or Alcohol- based			
Protection degree	According to IEC60529, UL508		IP20			-
Power dissipation	Idle (I_{MOT} = 0A)			1	1.2	W
	Full power (I_{MOT} = nominal)			2.0	2.4	
Power efficiency	Full power (I_{MOT} = nominal)			98.7		%
Voltage efficiency	f_{PWM} = 20KHz			98.3		
	f_{PWM} = 100KHz			91.4		
Surface temperature[1] for Micro MZ / LZ / PZ	Idle (I_{MOT} = 0A)			55		ºC
	Full power (I_{MOT} = nominal)				100	
Surface temperature of metallic baseplate for Micro 4804 CZ					40	ºC

4.4 Digital Inputs (IN0, IN1, IN2/LSP, IN3/LSN, IN4, IN5/ENA[2])

			Min.	Typ.	Max.	Units
Mode compliance			NPN (sink)			
Default state	Input floating (wiring disconnected)		Logic HIGH			
Input voltage	Logic "LOW"	IN0, IN1, IN4, IN5/ENA[2]		1.4	1.8	V
	Logic "HIGH"		3.1	2.5		
	Hysteresis		0.9	1.1	1.4	
	Logic "LOW"	IN2/LSP, IN3/LSN		1.4	1.6	
	Logic "HIGH"		4	3.5		
	Hysteresis			0.6		
	Floating voltage (not connected)			4.7		
	Absolute maximum, continuous	IN2/LSP, IN3/LSN, IN5/ENA[2]	-2		+80	
		IN0, IN1, IN4	-0.5		V_{LOG}+0.5	
Input current	Logic "LOW"; Pulled to GND			6.5	8	mA
	Logic "HIGH"; Pulled to +24V			0.2	0.4	
Input frequency			0		500	kHz
Minimum pulse			1			µs
ESD protection - Human body model			±2			kV

[1] In case of forced cooling (conduction or ventilation): a) the ambient temperature requirements may be extended substantially as long as the drive (PCB) temperature is kept below 85 ºC; b) the spacing requirements can be dropped down to zero; c) the surface temperature will decrease accordingly

[2] Enable functionality is available only for non-STO executions of Micro.

4.5 Motor Outputs (A/A+, B/A-, C/B+, CR/B-[2])

			Min.	Typ.	Max.	Units
Nominal current[1]	PMSM motors sinusoidal amplitude	Micro 4804 MZ/LZ Micro 4803 MZ/LZ			±6.3	A
		Micro 4804 PZ/CZ			±8	
	PMSM motors sinusoidal RMS	Micro 4804 MZ/LZ Micro 4803 MZ/LZ			4.5	A_{RMS}
		Micro 4804 PZ/CZ			5.7	
	DC/BLDC/STEP[2] motors continuous	Micro 4804 MZ/LZ Micro 4803 MZ/LZ			5.5	A
		Micro 4804 PZ/CZ			7	
Peak current	maximum 4 seconds		-16		+16	A
Short-circuit protection threshold				±25	±28	A
Short-circuit protection delay			2.6		3.5	µs
On-state voltage drop	Nominal output current; including typical mating connector contact resistance			50	70	mV
Off-state leakage current				0.3	1	mA
Current measurement	Accuracy (FS = Full Scale)			±1	±1.5	%FS
	Noise (current ≤ 2A)			±4	±6	mA
	Noise (current ≥ 2A)			±30	±50	
	Offset drift (compensated @ AxisOn)				±0.16	mA/ºC
Motor inductance (phase-to-phase)	Recommended value to avoid spurious short-circuit protection, triggered by ripple	Fast loop[3] / V_{MOT}				µH
		50µs / 48V		133		
		100µs / 48V		266		
		50µs / 24V		66		
		100µs / 24V		133		
Motor electrical time-constant (L/R)	Recommended value for ±5% current measurement error	F_{PWM} = 20 kHz		330		µs
		F_{PWM} = 40 kHz		170		
		F_{PWM} = 60 kHz		140		
		F_{PWM} = 80 kHz		80		
		F_{PWM} = 100 kHz		66		

4.6 Digital Outputs (OUT0, OUT1, OUT4)

				Min.	Typ.	Max.	Units
Mode compliance				NPN (sink) 24V			
Load type				Resistive, Inductive			
Default state	Not supplied ($+V_{LOG}$ floating)			High-Z (floating)			
	Immediately after power-up			Logic "HIGH"			
Output voltage	Logic "LOW"; output current = 1.5A for OUT0/ 0.05A for OUT1, OUT4					0.4	V
	Logic "HIGH"; output current = 0, no load			4	4.7	5.2	
	Logic "HIGH", external load to $+V_{LOG}$				V_{LOG}		
	Absolute maximum, continuous (free-wheeling diodes to $+V_{LOG}$ to GND)			-0.5		V_{LOG}+0.5	
	Absolute maximum, surge (duration ≤ 1s)†			-1		V_{LOG}+1	
Output current	Logic "LOW", sink current, short duration, duty cycle <=1%	5s max	OUT1, OUT4			0.1	A
			OUT0			2	
		0.5s max	OUT1, OUT4			0.15	
			OUT0			2.5	
	Logic "LOW", sink current, continuous; V_{OUT} ≤ 0.4V		OUT1, OUT4			0.05	
			OUT0			1.5	
	Logic "HIGH", source current; external load to GND; V_{OUT} ≥ 2.0V					5	mA
	Logic "HIGH", leakage current; external load to $+V_{LOG}$; V_{OUT} = V_{LOG} max = 40V		V_{LOG}=24V		0.18	0.2	mA
			V_{LOG}=48V		0.42	0.45	
Minimum pulse width				0.5			µs
ESD protection - Human body model				±25			kV

4.7 Digital Hall Inputs (Hall1, Hall2, Hall3)

			Min.	Typ.	Max.	Units
Mode compliance	TTL / CMOS / Open-collector (NPN sink), or analog (linear) 0…5V					
Default state	Input floating (Wiring disconnected)		4.5	4.8	5.2	V
Input voltage	Digital	Logic "LOW"		1.5	1.7	
		Logic "HIGH"	3	2.5		
		Hysteresis		0.5		
	Analog		0	0.5…4.5	4.95	
Input current	Logic "LOW"; Pull to GND			2.4		mA
	Logic "HIGH"; Internal 2.2KΩ pull-up to +5			0		
Minimum pulse width				66		µs
ESD protection - Human body model				±15		kV

[1] In case of Micro MZ / LZ / PZ, for current values >4A_{RMS}, pins J1/2…8 may need to be soldered instead of socketed, for long-term reliability – check socket manufacturer specifications.
[2] STEP motors are not supported by Micro 4803 executions.
[3] Fast loop period of 50µs is not possible with all feedback device types.

4.8 Encoder Inputs (A1+, A1-, B1+, B1-, Z1+, Z1-, A2+, A2-, B2+, B2-)[1]

		Min.	Typ.	Max.	Units
Single-ended mode compliance	Leave A1-, B1-, Z1-, A2-, B2- floating	TTL / CMOS / Open-collector (NPN sink)			
Single-ended threshold	A1+, B1+, Z1+, A2+, B2+	1.3	1.4	1.5	V
Single-ended input current	Input pulled to GND against on-board 2.2 KΩ pull-up to +5V		2.4	2.7	mA
Differential mode compliance	For full RS422 compliance, see[1]	TIA/EIA-422-A			
Input voltage	Hysteresis	±0.03	±0.05	±0.2	V
	Differential mode	-15		+15	
	Common-mode range (A+ to GND, etc.)	-7		+12	
Input impedance, differential	Common-mode (A1+ to GND, etc.)		2.2		kΩ
	Differential (A1+ to A1-, etc.)		4.4		
Input frequency	Differential mode	0		15	MHz
Minimum pulse width	Differential mode	33			ns
ESD protection	Human body model	±30			kV

4.9 Analog Input (REF,FDBK)

		Min.	Typ.	Max.	Units
Input voltage	Operational range	0…5, -10…+10			V
	Absolute maximum values, continuous	-22		+26	
	Absolute maximum, surge (duration ≤ 1s)			±38	
Input impedance	To 1.44V		20		kΩ
Bandwidth (-3dB)	Software selectable	0		5.3	kHz
Resolution		12			bits
Integral linearity				±1	bits
Offset error	Range -10V … +10V		±10	±30	mV
	Range 0 …+5V		±15	±40	
Gain error	Range -10V … +10V		±30	±50	%
	Range 0 …+5V		±25	±40	
ESD protection	Human body model	±1.5			kV

4.10 SSI/BiSS/Panasonic/ EnDAT/Nikon/Sanyo Denki encoder interface

		Min.	Typ.	Max.	Units
Single-ended mode	Not recommended, reduced robustness & speed				
Differential mode compliance	For full RS422 compliance, see[1]	TIA/EIA-422-A			
Output voltage	Differential; 50Ω differential load	1.5	3.3		V
	Common-mode, referenced to GND	1	1.7	3	
CLOCK frequency	Nikon, Sanyo Denki	2.5, 4			MHz
	Panasonic, Tamagawa	2.5			
	All others	1, 2, 3, 4			
Output Short- circuit protection	Common-mode voltage ±15V	Yes, protected			
DATA format	Software selectable	Binary / Gray			
		Single-turn / Multi-turn			
		Counting direction			
		CRC type			
DATA resolution	Including CRC, flags, …			64	Bits
	If total resolution >31 bits, some bits must be ignored by software setting to achieve a max. 31 bits resolution				

4.11 Supply Output (+5V)

		Min.	Typ.	Max.	Units
Output voltage	Current sourced = 400mA	5.05	5.2	5.25	V
Output current	Output voltage ≥ 4.85V			1,200	mA
Short-circuit to GND protection		Yes / Drive resets at event			
Over-voltage protection		NOT protected			
ESD protection	Human body model	±1			KV

[1] For Micro MZ / LZ / PZ - Full RS-422 compatibility, as well as noise rejection improvement requires an external 120Ω resistor connected across each signal pair (A1+/A1-, B1+/ B1-, Z1+/Z1-, A2+/A2-, B2+/B2-).

For Micro 4804 CZ, the 120Ω resistor is connected between the differential pairs via SW1 positions 7 to 11.

4.12 LED Outputs for Micro MZ / LZ / PZ

		Min.	Typ.	Max.	Units
Polarity	Active high (high=LED lit)				
	Common cathode to GND				
Voltage	$I_{OH} \leq 0.9mA$	2.9	3.3		V
	$I_{OH} \leq 1.5mA$	2.4			V
	$I_{OL} \leq 2.0mA$		0	0.4	V
	Abs. max., continuous	-0.5		3.8	V
Current	Sink (I_{OL}) current larger than source (I_{OH}) current	-2.0		+1.5	mA
Short-circuit protection		NOT protected			
ESD protection	Human body model		±250		V

4.1 AxisID inputs for Micro MZ / LZ / PZ

		Min.	Typ.	Max.	Units
Default state	ID1, ID1, ID2 floating	Configured Station Alias = 0, AxisID=255			
Internal pull-down to GND		95	100	105	kΩ
ESD protection	Human body model		±250		V

4.1 BFS input for Micro MZ / LZ / PZ

		Min.	Typ.	Max.	Units
Polarity		Active Low (0=fail-safe boot, 1=normal)			
Default state	BFS floating	High			
Voltage	Logic low (active)		0	1.1	V
	Logic high (inactive)	2.0	3.3		V
	Abs. max., continuous	-0.5		3.8	V
Current	Logic low (2.2KΩ pull to +3.3V)		1.5	1.6	mA
	Logic high		0		mA
ESD protection	Human body model	±250			V

4.2 .RS-232

		Min.	Typ.	Max.	Units
Compliance	TIA/EIA-232-C				
Bit rate	Default	9600			Baud
	Software selectable	9600		115200	
Short-circuit	232TX short to GND	Guaranteed			
Input voltage	Absolute maximum, continuous	-30		+30	V
ESD protection	Human body model	±2			kV

4.3 USB

		Min.	Typ.	Max.	Units
Compliance	USB 2.0 device (slave)				
End-point type	Emulated	UART (RS-232)			
ESD protection	Human body model	±2			kV

4.4 CAN-Bus for for Micro MZ / PZ / LZ - CAN

		Min.	Typ.	Max.	Units
Compliance	CAN 2.0B, ISO 11898-2				
Software protocols compatibility	CiA301, CiA305, CiA402, TechnoCAN, TMLcan				
Bit rate	Software selectable	125, 250, 500, 1000			KBaud
Node addressing	TMLcan	1 ÷ 255			-
	CANopen	not configured, 1 ÷ 127			-
Voltage	Common-mode, operating	-12		+12	V
	Common-mode, max. continuous	-58		+58	V
	Differential, max. continuous	-45		+45	V
Input impedance	Differential	40		90	KΩ
	Common-mode	20		45	KΩ
Termination resistor (120Ω)	Micro 4804 MZ / LZ / PZ	NOT included			
	Micro 4804 CZ	Included – SW1 Position 12			
ESD protection	Human body model	±10			kV

4.1 EtherCAT ports for Micro 4804 CZ-CAT

		Min.	Typ.	Max.	Units
Compliance		IEEE802.3, IEC61158			
Software protocols compatibility		CoE, FoE, EoE, IEC61800-7-301			
Transmission line	According to TIA/EIA-568-5-A	5	5e	6	Category
		UTP	FTP	STP	Shield
Auto	swap + / - inside a pair	Yes (MLT3 encoding)			
	swap Rx / Tx pairs	Yes (auto-MDI/MDIX)			
	Swap port0(IN) / port1(OUT)	NO (EtherCAT requirement)			
Configured Station Alias (using AxisID)		0÷31 and 128÷159			-
ESD protection	Human body model	±5			kV

4.2 EtherCAT ports for Micro MZ / PZ / LZ - CAT

		Min.	Typ.	Max.	Units
Compliance		IEEE802.3, IEC61158			
Software protocols compatibility		CoE, FoE, EoE, IEC61800-7-301			
Magnetics		Required, external			
	Turns ratio	1:1			
	Inductance	350			µH
	Common mode rejection	-30			dB
	Center tap	to J1 pins 15, 16			
Transmission line	According to TIA/EIA-568-5-A	5	5e	6	Category
		UTP	FTP	STP	Shield
Auto	swap + / - inside a pair	Yes (MLT3 encoding)			
	swap Rx / Tx pairs	Yes (auto-MDI/MDIX)			
	Swap port0(IN) / port1(OUT)	NO (EtherCAT requirement)			
Configured Station Alias (using AxisID)		0 ÷ 255			-
ESD protection	Human body model	±5			kV

4.3 Safe Torque OFF (STO1+; STO1-; STO2+; STO2-) for STO executions

		Min.	Typ.	Max	Units
Safety Integrity Level		SIL 3			
Performance Level		PL e			
Safety Category		Cat 3			
Reaction time				30	ms
Ignored diagnostic pulses	Duration			5	ms
	Repetition rate			20	Hz
MTTFd			377		years
DC			90		%
PFH			8E-10		hours
Lifetime			20		years
V_{LOG}	External power supply	SELV or PELV			
Pollution Degree				2	-
	Cabinet / Housing	IP54			-
STO wiring	Bundling / Grouping	Separate wiring for STO1, STO2			
	Shielding	Separate shield for STO1, STO2			
Compatibility	Each STO channels has separate + and - terminals	PNP (source) or NPN (sink), depending on user connection			
Isolation		Each STO channel is opto-isolated			
Voltage, STOx+ to STOx-	Inactive (torque off)		0	5.6	V
	Active (motor driven)	18	24		V
	Abs. maximum, continuous	-70		+70	V
Voltage	Isolation, STO1 to STO2	±2			KV
	Isolation, STOx to GND	±2			KV
Current	STOx+ - STOx- = 24V		3	5	mA
ESD protection	Human body model	±30			kV

† Stresses beyond values listed under “absolute maximum ratings” may cause permanent damage to the device. Exposure to absolute-maximum-rated conditions for extended periods may affect device reliability.

5 De-rating curves for Micro 4804 MZ / LZ

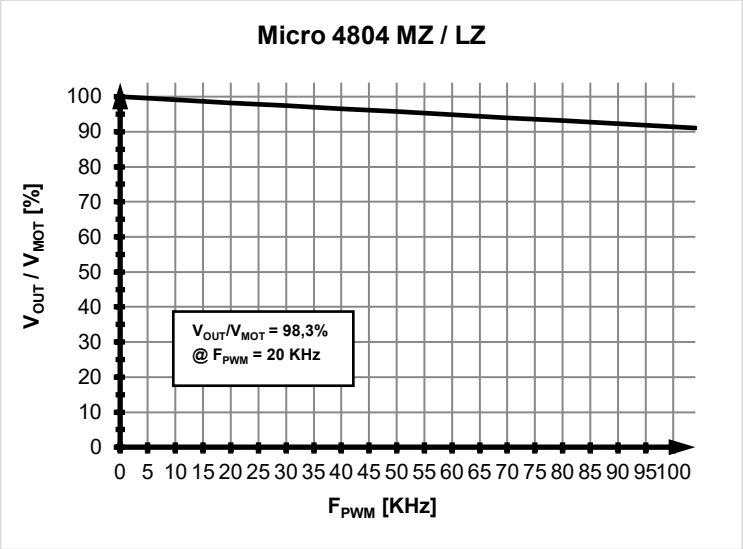

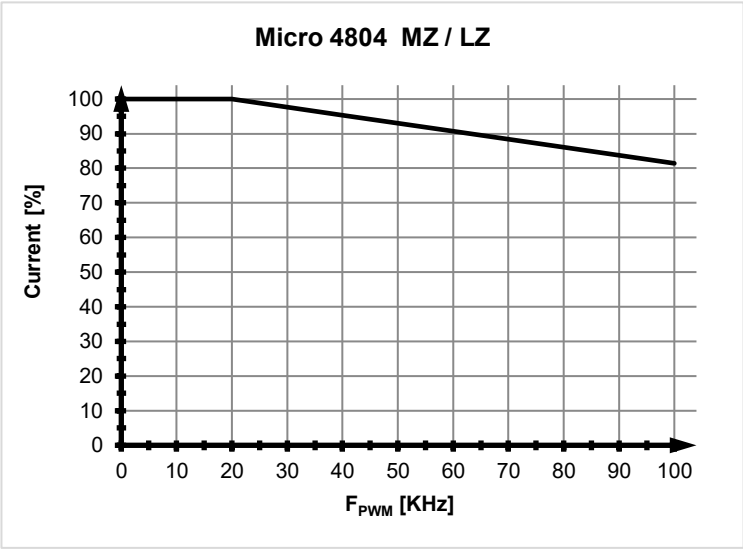

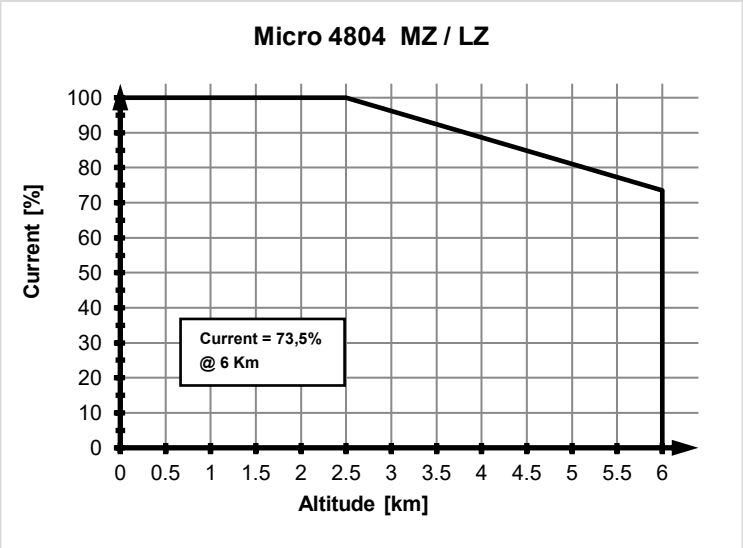

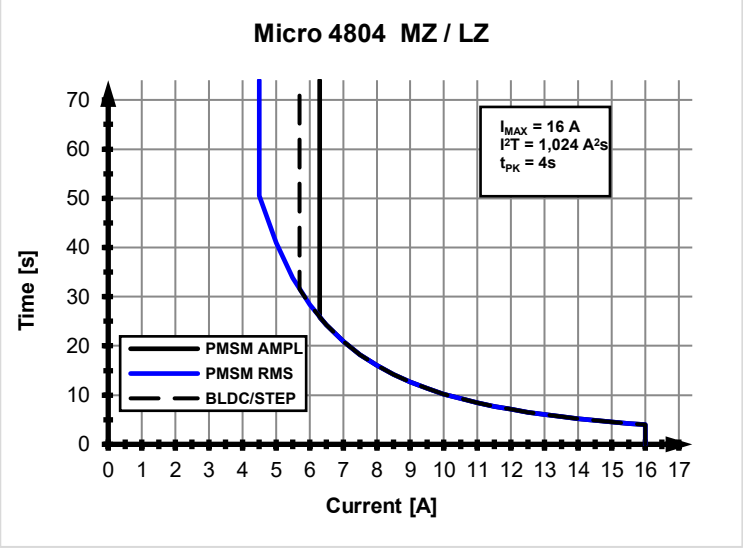

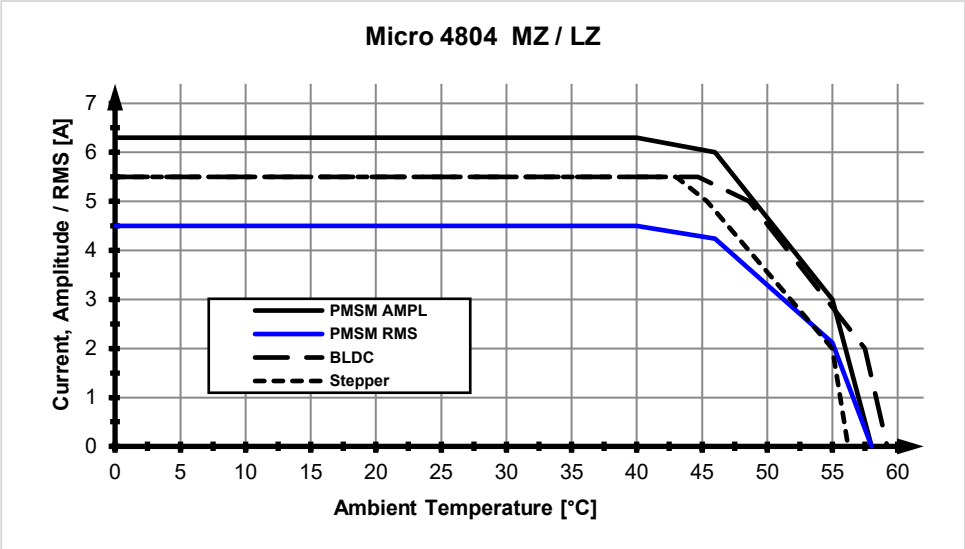

6 De-rating curves for Micro 4804 PZ / CZ

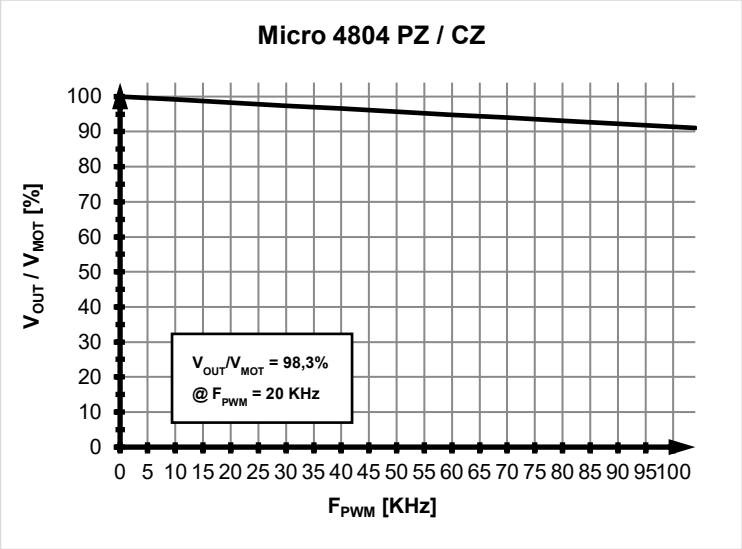

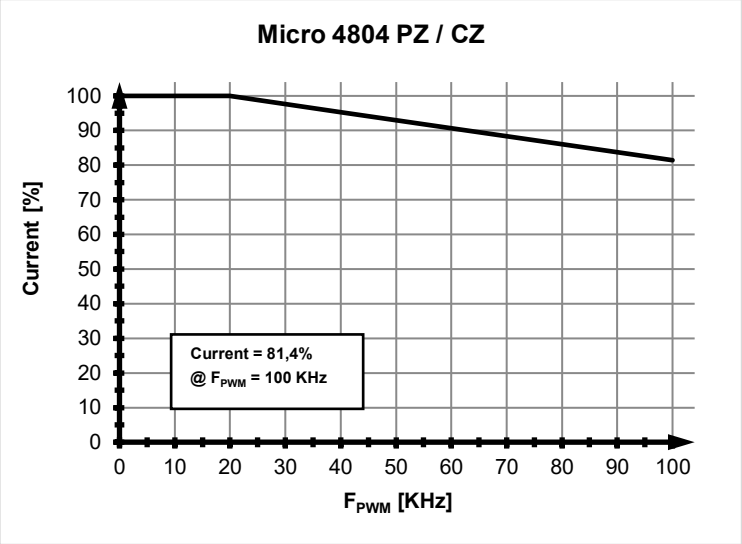

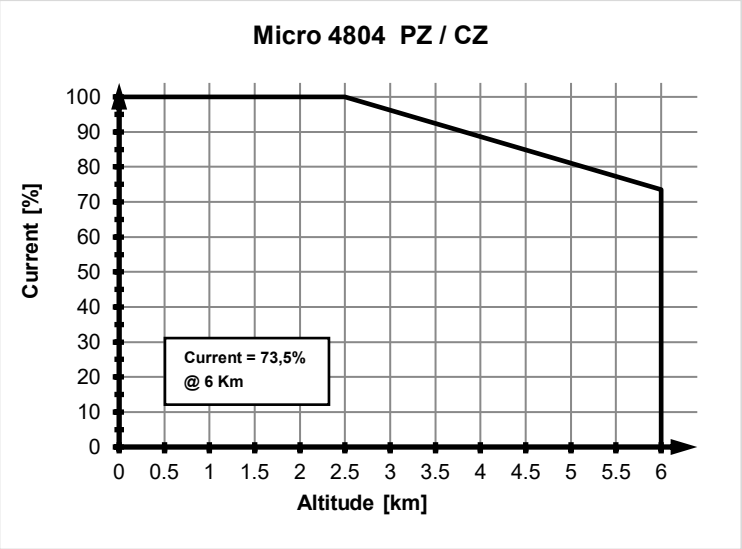

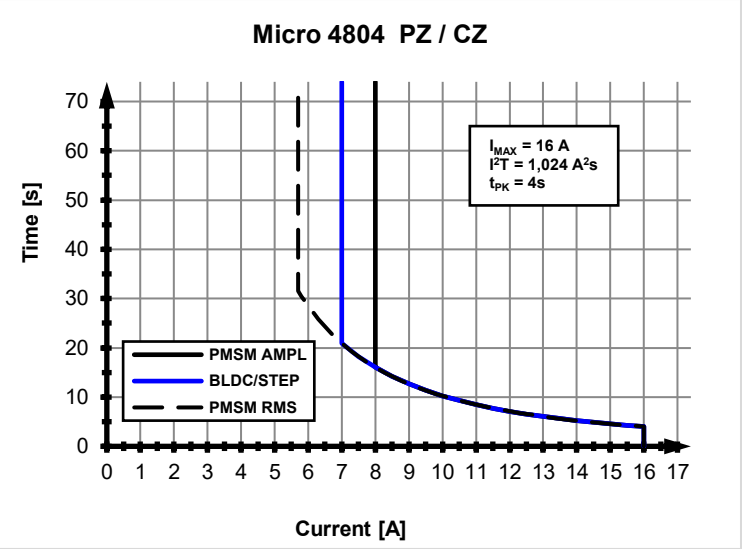

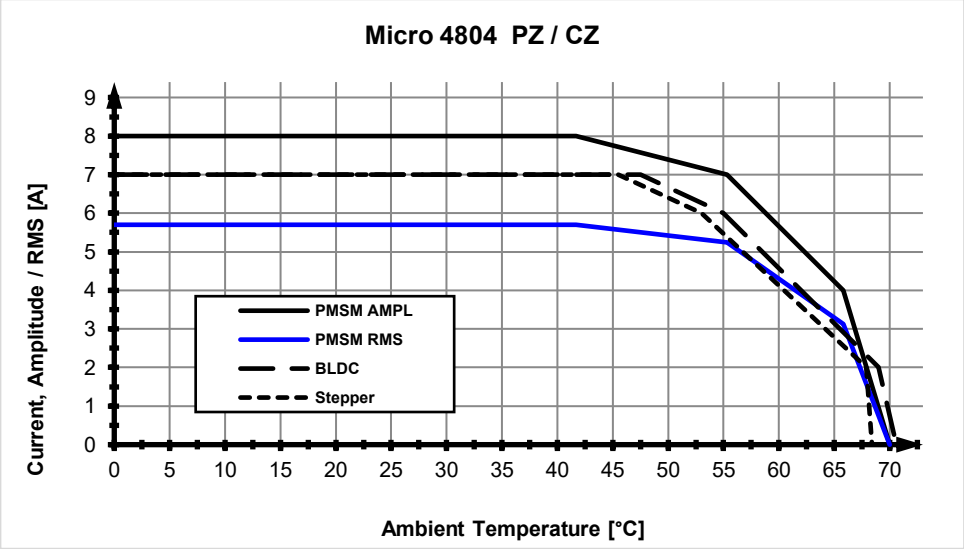

7 De-rating curves for Micro 4803 MZ / LZ

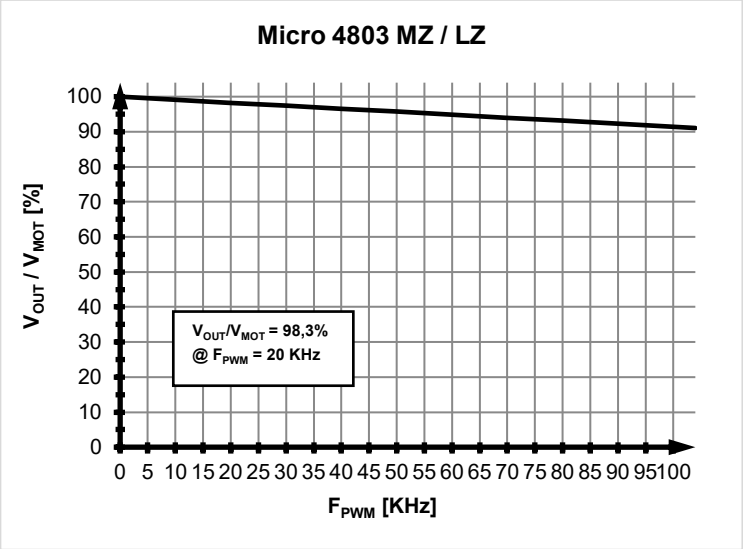

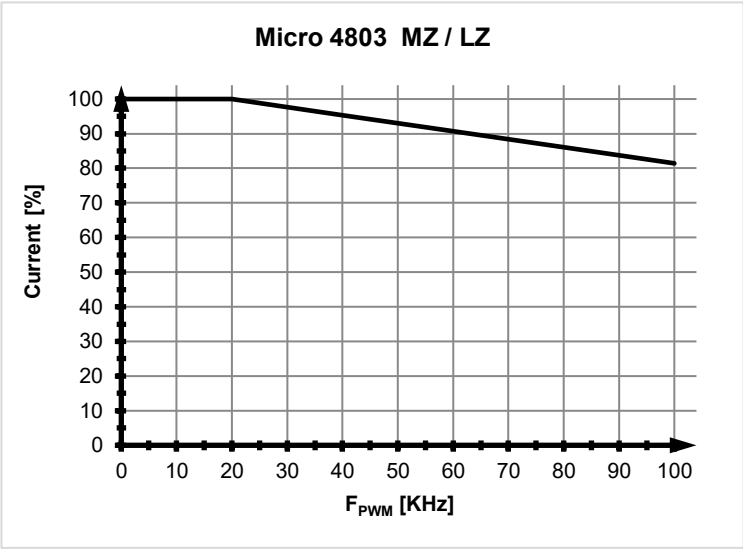

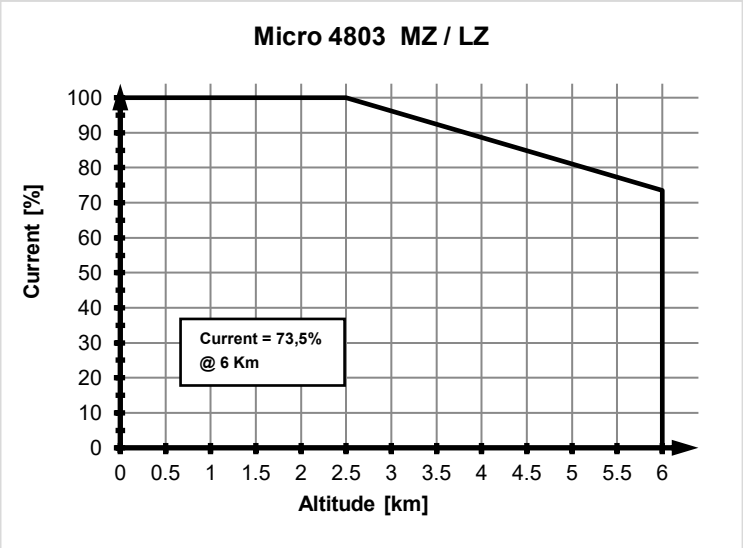

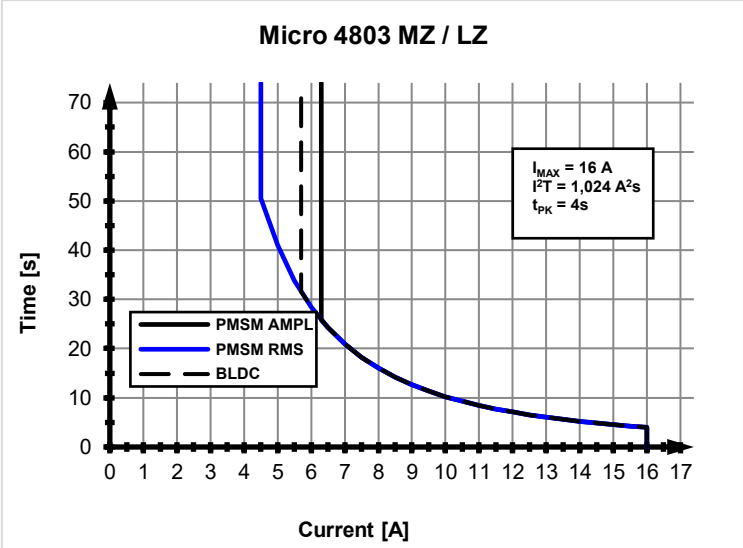

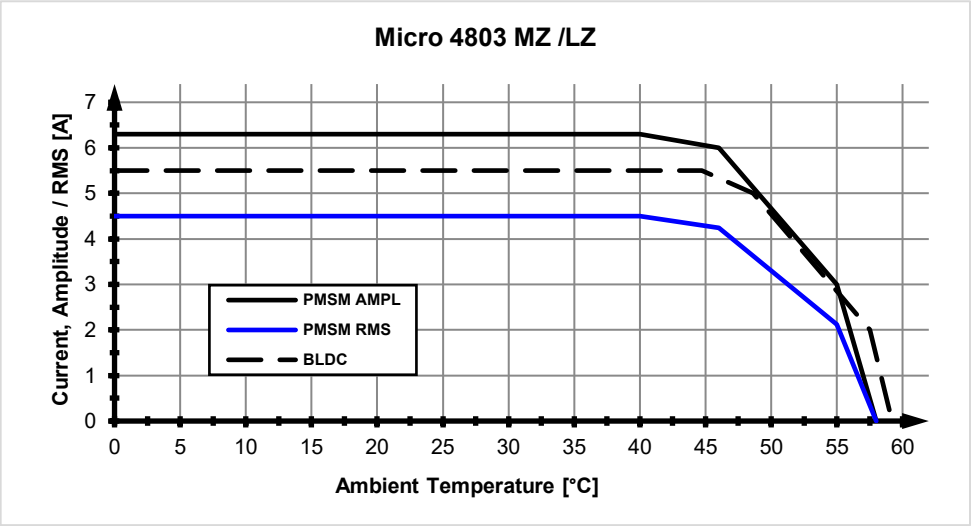

8 Memory Map

Micro has 2 types of memory available for user applications: 16K×16 SRAM and up to 24K×16 serial E^2ROM.

The SRAM memory is mapped in the address range: C000h to FFFFh. It can be used to download and run a TML program, to save real-time data acquisitions and to keep the cam tables during run-time.

The E^2ROM is mapped in the address range: 2000h to 7FFFh. It is used to keep in a non-volatile memory the TML programs, the cam tables and the drive setup information.

Remark: *EasyMotion Studio handles automatically the memory allocation for each motion application. The memory map can be accessed and modified from the "Memory Settings" dialogue of each application*

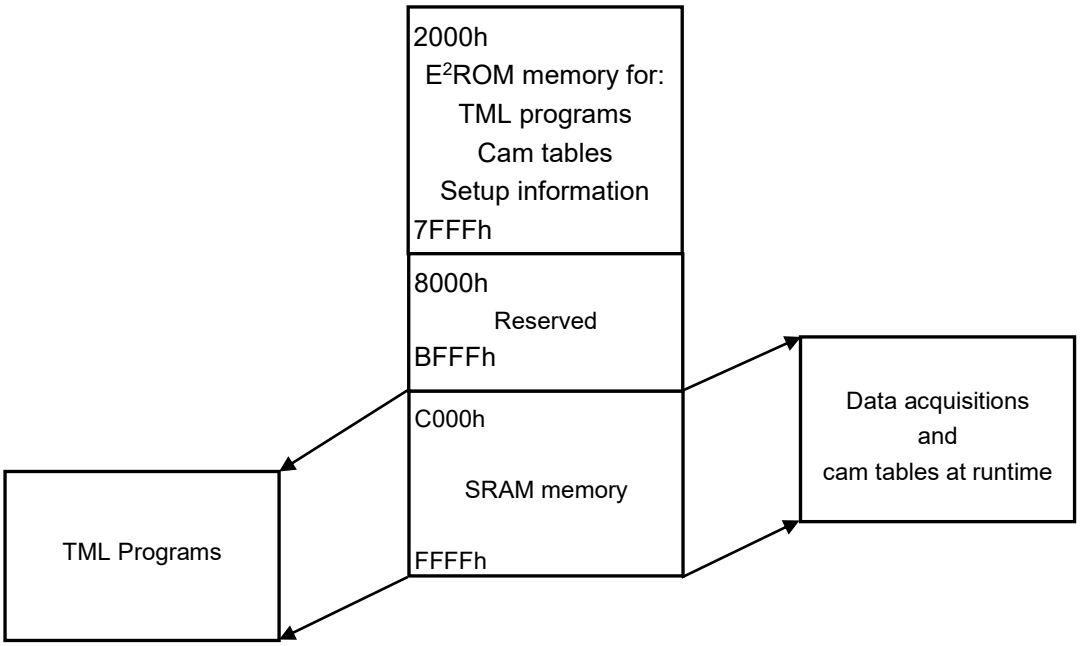

Figure 8-1 *Micro Memory Map*

TECHNOSOFT
MOTION TECHNOLOGY