TECHNOSOFT

iMOT17x TM-CAN Cable Set
P/N: P038.040.C199

RoHS

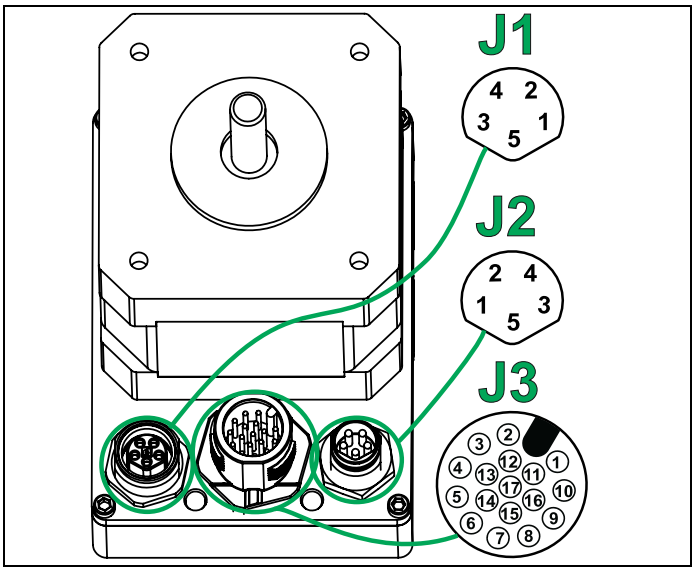

Ordering information			
Part No.	**Description**	**Package components**	**Connectors**
P038.040.C199	**CCS iMOT17 TM-CAN** (Complete cable set, 150 cm)	1 x Supply & RS-232 & I/O cable	J3
		2 x CAN cables: - 1 x Interconnect cable - 1 x CAN to flying leads cable	J1&J2

Compatible products		
Part No.	**Name**	**Description**
P042.111.E320	**iMOT171B TM-CAN**	Brushless Nema 17, size 1, CAN version, IP66 connectors
P042.121.E320	**iMOT172B TM-CAN**	Brushless Nema 17, size 2, CAN version, IP66 connectors
P042.131.E120	**iMOT173B TM-CAN**	Brushless Nema 17, size 3, CAN version, IP66 connectors
P036.121.E320	**iMOT172S TM-CAN**	Stepper Nema 17, size 2, CAN version, IP66 connectors

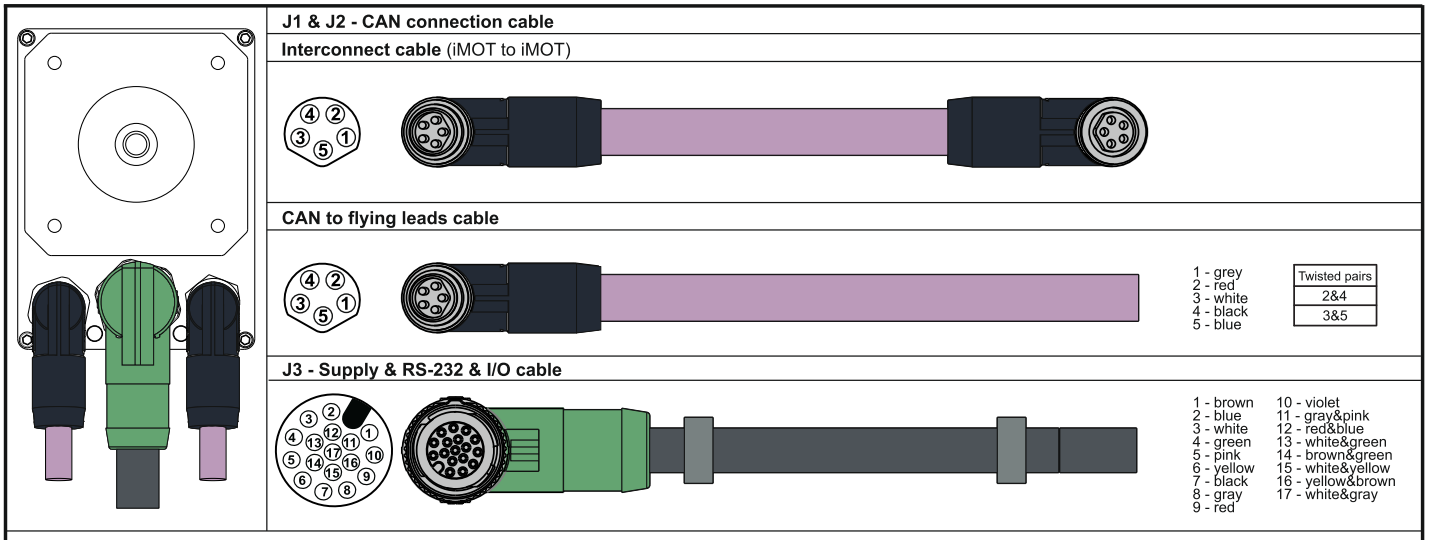

Cables description
- **Cables length: 1500mm;**
- **Stripping length of the free conductor end: 50mm.**

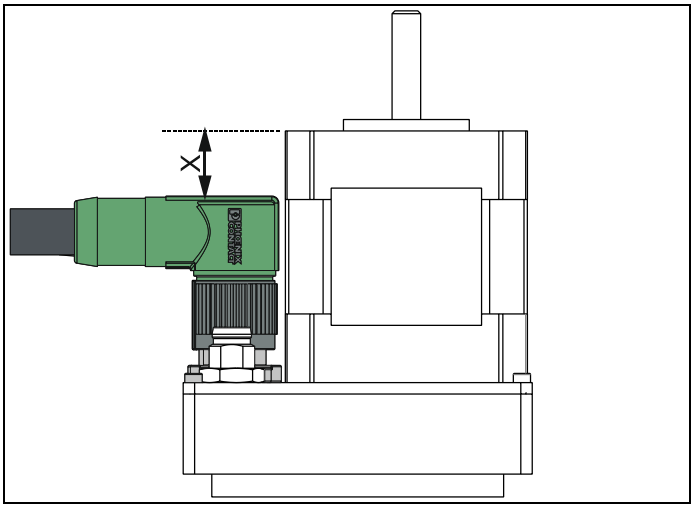

	X [mm]			
	iMOT171B TM-CAN	**iMOT172B TM-CAN**	**iMOT173B TM-CAN**	**iMOT172S TM-CAN**
Max	15.5	33.5	53.5	12.5
Min	12.5	30.5	50.5	10.5