iPOS2401 MX-CAN DATASHEET
P/N: P024.300.E101

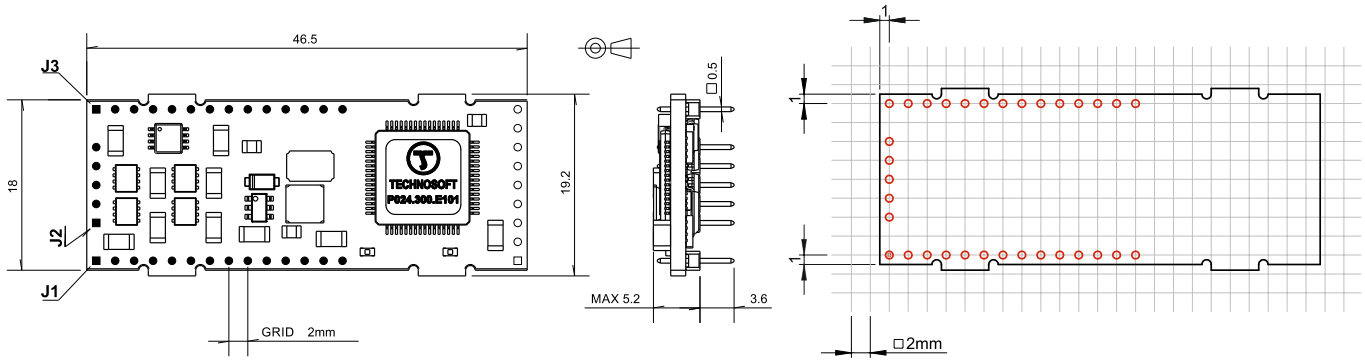

Top view; Pins facing downward; All dimensions are in mm; Header pitch is 2 mm.; Drawing not to scale; Tolerance ±0.1mm (unless otherwise noted)

Motor – sensor configurations

Sensor \ Motor	PMSM	BLDC	DC BRUSH	STEP (2-ph)	STEP (3-ph)
Incr. Encoder	✓		✓	✓	
Incr. Encoder + Digital Hall	✓	✓			
Digital halls only	✓				
Linear Halls	✓				
Tacho			✓		
Open-loop (no sensor)				✓	✓
Open-loop (with step loss detection using incr. enc.)				✓	✓
Open-loop (with incr. enc on load.)				✓	✓

Mating Connectors

Ref	Producer	Part No.		Description
J1, J3	Through-hole	Samtec	SQT-114-01-L-S	14-pin single-row 2.0mm-pitch vertical through-hole socket, accepting 0.5mm square pin
		Harwin	M22-7131442	
	SMD	Samtec	SMM-114-02-L-S	14-pin single-row 2.0mm-pitch vertical SMD socket, accepting 0.5mm square pin
		Fischer	BLY 5 SMD 14	
J2	Through-hole	Samtec	SQT-105-01-L-S	5-pin single-row 2.0mm-pitch vertical through-hole socket, accepting 0.5mm square pin
		Harwin	M22-7130542	
	SMD	Samtec	SMM-105-02-L-S	5-pin single-row 2.0mm-pitch vertical SMD socket, accepting 0.5mm square pin
		Fischer	BLY 5 SMD 05	

- **Features**
- Motion controller and drive in a single compact unit based on MotionChip ™ technology
- Universal solution for control of rotary and linear brushless, brushed and 2 or 3-phase step motors
- Motor supply: 7-30V. Logic supply: 7-40V
- Output current: 0.9A cont. (BLDC mode); 0.9A$_{PEAK}$, up to 120kHz PWM
- Digital Hall sensor interface (single-ended and open collector)
- Incremental encoder interface (single-ended, open collector and differential)
- Linear Hall sensors interface
- 5 digital inputs, 5-24V, NPN: Enable, 2 for limit switches, 2 general-purpose
- 2 digital outputs, 5-24V, 0.5A, NPN O.C.:
- 2 drive state LEDs having the function or Error and Ready.
- 1 analogue input: 12-bit, 0-5V: Reference/Feedback or general purpose
- RS-232 serial & CAN-bus 2.0B interfaces
- TMLCAN and CANopen (CiA 301v4.2 and 402v3.0) protocols, selectable by hardware pin
- 2K × 16 SRAM for data acquisition
- 4K × 16 E^{2}ROM to store TML motion programs and data
- Operating ambient temperature: 0-70°C
- Hardware Protections: short-circuit between motor phases and from motor phases to GND, over-voltage, under-voltage, over-temperature and I^{2}t

	Pin	Name	Type	Description
J1	1	GND	-	Return ground
	2	+V_{MOT}	I	Positive terminal of the motor supply: 7 to 30V_{DC}
	3	+V_{LOG}	I	Positive terminal of the logic supply: 7 to 40V_{DC}
	4	OUT0	O	5-24V 0.5A general-purpose digital output, NPN open-collector / TTL pull-up
	5	OUT1	O	5-24V 0.5A general-purpose digital output, NPN open-collector / TTL pull-up
	6	IN0	I	5-24V digital NPN input
	7	IN1	I	5-24V digital NPN input
	8	IN2 / LSP	I	5-24V digital NPN input Positive limit switch input
	9	IN3 / LSN	I	5-24V digital NPN input Negative limit switch input
	10	IN4 / Enable	I	5-24V digital NPN input Drive enable input
	11	232RX	I	RS-232 Data Reception
	12	232TX	O	RS-232 Data Transmission
	13	Can-Hi	I/O	CAN-Bus positive line (dominant high)
	14	Can-Lo	I/O	CAN-Bus negative line (dominant low)

	Pin	Name	Type	Description
J3	1	GND	-	Return ground
	2	A / A+	I	Incr. encoder A single-ended, or A+ diff. input
	3	A-	I	Incr. encoder A- diff. input, or linear Hall 3 input
	4	B / B+	I	Incr. encoder B single-ended, or B+ diff. input
	5	B-	I	Incr. encoder B- diff. input, or linear Hall 2 input
	6	Z / Z+	I	Incr. encoder Z (index) single-ended, or Z+ diff. input
	7	Z-	I	Incr. encoder Z- differential input, or linear Hall 1 input
	8	Hall 1	I	Digital input Hall 1 sensor
	9	Hall 2	I	Digital input Hall 2 sensor
	10	Hall 3	I	Digital input Hall 3 sensor
	11	REF/FDBK	I	Analogue input, 12-bit, 0-5V. Used to read an analog position, speed or torque reference or feedback; can be used as general purpose analogue input
	12	+5V_{OUT}	O	5V output supply
	13	TMLCAN/ CANopen	I	Connect to GND to enable CANopen protocol; Leave unconnected for TMLCAN protocol
	14	GND	-	Return ground

	Pin	Name	Type	Description
J2	1	B / A-	O	Phase B for 3-ph motors, A- for 2-ph steppers, Motor- for DC brush motors
	2	A / A+	O	Phase A for 3-ph motors, A+ for 2-ph steppers, Motor+ for DC brush motors
	3	GND	-	Return ground
	4	C / B+	O	Phase C for 3-ph motors, B+ for 2-ph steppers
	5	CR / B-	O	Chopping Resistor output/ Phase B- for step motors

Electrical characteristics

All parameters measured under the following conditions (unless otherwise specified):

- Tamb = 0...70ºC, VLOG = 24 VDC; VMOT = 24VDC
- Supplies start-up / shutdown sequence: -any-
- Load current (sinusoidal amplitude / continuous BLDC, DC, stepper) = 0.9A

Operating Conditions		Min.	Typ.	Max.	Units
Ambient temperature		0		+70	ºC
Ambient humidity	Non-condensing	0		90	%Rh
Altitude / pressure[1]	Altitude (vs. sea level)	-0.1	0 ÷ 2.5	[2]	Km
	Ambient Pressure	0 [2]	0.75 ÷ 1	10.0	atm
Storage Conditions		**Min.**	**Typ.**	**Max.**	**Units**
Ambient temperature		-40		105	ºC
Ambient humidity	Non-condensing	0		100	%Rh
Ambient Pressure		0		10.0	atm
ESD capability (Human body model)	Not powered; applies to any accessible part			±0.5	kV
	Original packaging			±15	kV
Mechanical Mounting		**Min.**	**Typ.**	**Max.**	**Units**
Airflow		natural convection[2], closed box			
Spacing required for horizontal mounting	Between adjacent drives	4			mm
	Between drives and nearby walls	5			mm
	Space needed for drive removal	10			mm
	Between drives and roof-top	20			mm
Insertion force	Using recommended mating connectors		2.2...4.5	6.7	Kg
Extraction force		0.6	1.0..1.7		
Environmental Characteristics		**Min.**	**Typ.**	**Max.**	**Units**
Size (Length x Width x Height)	Global size	46.5 x 19.2 x 8.5			mm
		~1.83 x 0.76 x 0.33			inch
Weight		<20			g
Cleaning agents	Dry cleaning is recommended	Only Water- or Alcohol- based			
Protection degree	According to IEC60529, UL508	IP00			-
Logic Supply Input (+V_{LOG})		**Min.**	**Typ.**	**Max.**	**Units**
Supply voltage	Nominal values	6	24	39	V_{DC}
	Absolute maximum values, drive operating but outside guaranteed parameters	5.7		40	V_{DC}
	Absolute maximum values, continuous	-0.6		42	V_{DC}
	Absolute maximum values, surge (duration ≤ 10ms)†	-1		+45	V
Supply current	+V_{LOG} = 12V		75		mA
	+V_{LOG} = 24V		40	280	

Motor Supply Input (+V_{MOT})		Min.	Typ.	Max.	Units
Supply voltage	Nominal values	6.5	24	28	V_{DC}
	Absolute maximum values, drive operating but outside guaranteed parameters	4.8		29	V_{DC}
	Absolute maximum values, continuous	-0.6		30	
	Absolute maximum values, surge (duration ≤ 10ms)†	-1		32	V
Supply current	Idle		10	25	mA
	Operating	-0.9	±0.9	+0.9	A
	Absolute maximum value, short-circuit condition (duration ≤ 10ms)†			4	A
Motor Outputs (A/A+, B/A-, C/B+, CR/B-)		**Min.**	**Typ.**	**Max.**	**Units**
Nominal output current, continuous[3]	for DC brushed, steppers and BLDC motors with Hall-based trapezoidal control			0.9	A
	for PMSM motors with FOC sinusoidal control (sinusoidal amplitude value)			0.9	
	for PMSM motors with FOC sinusoidal control (sinusoidal effective value)			0.64	
Motor output current, peak		-0.9		+0.9	A
Short-circuit protection threshold			±1.3		A
Short-circuit protection delay		5	10		µs
On-state voltage drop	Nominal output current; including typical mating connector contact resistance		±50	±100	V
Off-state leakage current			±0.5	±1	mA
Motor inductance (phase-to-phase)	Recommended value, for current ripple max. ±5% of full range; +V_{MOT} = 24 V — F_{PWM}				µH
	20 kHz	160			
	40 kHz	80			
	60 kHz	60			
	80 kHz	40			
	100 kHz	30			
	Minimum value, limited by short-circuit protection; +V_{MOT} = 24 V — 20 kHz	60			µH
	60 kHz	20			
	40 kHz	15			
	80 kHz	8			
	100 kHz	4			
Motor electrical time-constant (L/R)	Recommended value for ±5% current measurement error — 20 kHz	250			µs
	40 kHz	125			
	60 kHz	100			
	80 kHz	63			
	100 kHz	50			
Current measurement	FS = Full Scale accuracy		±4	±8	%FS
Digital Inputs (IN0, IN1, IN2/LSP, IN3/LSN, IN4/Enable)		**Min.**	**Typ.**	**Max.**	**Units**
Mode compliance		TTL / CMOS / LVTTL (3.3V) / Open-collector / NPN / 24V outputs			
Default state	Input floating (wiring disconnected)	Logic HIGH			
Input voltage	Logic "LOW"		0	0.8	V
	Logic "HIGH"	2	5÷24		
	Floating voltage (not connected)		3		
	Absolute maximum, continuous	-10		+30	
	Absolute maximum, surge (duration ≤ 1s)†	-20		+40	
Input current	Logic "LOW"; pulled to GND		0.6	1	mA
	Logic "HIGH"; Internal 4.7KΩ pull-up to +3.3	0	0	0	
	Logic "HIGH"; Pulled to +5V		0.15	0.2	
	Logic "HIGH"; Pulled to +24V		2	2.5	
Input frequency		0		150	kHz
Minimum pulse		3.3			µs
ESD protection	Human body model	±5			kV

[1] iPOS2401 can be operated in vacuum (no altitude restriction), but at altitudes over 2,500m, current and power rating are reduced due to thermal dissipation efficiency.

[2] In case of forced cooling (conduction or ventilation) the spacing requirements may drop substantially down to zero as long as the ambient temperature is kept below the maximum operating limit

[3] @20Khz F_{PWM}

Digital Outputs (OUT0, OUT1)		**Min.**	**Typ.**	**Max.**	**Units**
Mode compliance	All outputs (OUT0, OUT1)	TTL / CMOS / Open-collector / NPN 24V			
Default state	Not supplied (+V_{LOG} floating or to GND)	High-Z (floating)			
	Immediately after power-up	Logic "HIGH"			
	Normal operation	Logic "HIGH"			
Output voltage	Logic "LOW"; output current = 0.5A		0.2	0.8	V
	Logic "HIGH"; output current = 0, no load	4	4.5	5	
	Logic "HIGH", external load to +V_{LOG}		V_{LOG}		V
	Absolute maximum, continuous	-0.5		V_{LOG}+0.5	
	Absolute maximum, surge (duration ≤ 1s)†	-1		V_{LOG}+1	
Output current	Logic "LOW", sink current, continuous			0.5	A
	Logic "LOW", sink current, pulse ≤ 5 sec.			1	A
	Logic "HIGH", source current; external load to GND; V_{OUT} >= 2.0V			4	mA
	Logic "HIGH", leakage current; external load to +V_{LOG}; V_{OUT} = V_{LOG} max = 40V		0.1	0.2	mA
Minimum pulse width		2			µs
ESD protection	Human body model	±5			kV
Digital Hall Inputs (Hall1, Hall2, Hall3)		**Min.**	**Typ.**	**Max.**	**Units**
Mode compliance		TTL / CMOS / Open-collector			
Default state	Input floating (wiring disconnected)	Logic HIGH			
Input voltage	Logic "LOW"		0	0.8	V
	Logic "HIGH"	2	5		
	Floating voltage (not connected)		4.4		
	Absolute maximum, surge (duration ≤ 1s)†	-10		+15	
Input current	Logic "LOW"; Pull to GND			1.2	mA
	Logic "HIGH"; Internal 4.7KΩ pull-up to +5	0	0	0	
Minimum pulse width		2			µs
ESD protection	Human body model	±5			kV
Linear Hall Inputs (LH1, LH2, LH3)		**Min.**	**Typ.**	**Max.**	**Units**
Input voltage	Operational range	0	0.5÷4.5	4.9	V
Input voltage	Absolute maximum values, continuous	-7		+7	V
	Absolute maximum, surge (duration ≤ 1s)†	-11		+14	
Input current	Input voltage 0…+5V	-1	±0.7	+1	mA
Interpolation Resolution	Depending on software settings	9		13	bits
Frequency		0		4	kHz
ESD protection	Human body model	±15			kV
Analog 0…5V Input (REF/FDBK)		**Min.**	**Typ.**	**Max.**	**Units**
Input voltage	Operational range	0		5	V
	Absolute maximum values, continuous	-12		+18	
	Absolute maximum, surge (duration ≤ 1s)†			±36	
Input impedance	To +1.47V		41		KΩ
Resolution			12		bits
Integral linearity				±2	bits
Offset error			±2	±10	bits
Gain error			±1%	±3%	% Fs[1]
Bandwidth (-3dB)	Software selectable	0		1	kHz
ESD protection	Human body model	±5			kV

Encoder Inputs (A/A+, A-, B/B+, B-, Z/Z+, Z)		**Min.**	**Typ.**	**Max.**	**Units**
Single-ended mode compliance	Leave negative inputs disconnected	TTL / CMOS / Open-collector			
Input voltage, single-ended mode A/A+, B/B+	Logic "LOW"			1.6	V
	Logic "HIGH"	1.8			
	Floating voltage (not connected)		3.3		
Input voltage, single-ended mode Z/Z+	Logic "LOW"			1.2	V
	Logic "HIGH"	1.4			
	Floating voltage (not connected)		4.7		
Input current, single-ended mode A/A+, B/B+, Z/Z+	Logic "LOW"; Pull to GND		2.5	3	mA
	Logic "HIGH"; Internal 2.2KΩ pull-up to +5	0	0	0	
Differential mode compliance	For full RS422 compliance, see [2]	TIA/EIA-422-A			
Input voltage, differential mode	Hysteresis	±0.06	±0.1	±0.2	V
	Common-mode range (A+ to GND, etc.)	-7		+7	
Input impedance, differential	A+ to A-, B+ to B-, Z+ to Z-	2.7	2.8		KΩ
Input frequency	Single-ended mode, Open-collector / NPN	0		500	kHz
	Differential mode, or Single-ended driven by push-pull (TTL / CMOS)	0		12	MHz
Minimum pulse width	Single-ended mode, Open-collector / NPN	1			µs
	Differential mode, or Single-ended driven by push-pull (TTL / CMOS)	20			ns
Input voltage, any pin to GND	Absolute maximum values, continuous	-7		+7	V
	Absolute maximum, surge (duration ≤ 1s)†	-11		+14	
ESD protection	Human body model	±1			kV
RS-232		**Min.**	**Typ.**	**Max.**	**Units**
Compliance		TIA/EIA-232-C			
Bit rate	Software selectable	9600		115200	Baud
Short-circuit	232TX short to GND	Guaranteed			
ESD protection	Human body model	±2			kV
CAN-Bus		**Min.**	**Typ.**	**Max.**	**Units**
Compliance		ISO11898, CiA-301v4.2 & 402v3.0			
Bit rate	Software selectable	125		1000	Kbps
Bus length	1Mbps			40	m
	500Kbps			100	
	≤ 250Kbps			250	
Resistor	Between CAN-Hi, CAN-Lo	none on-board			
Node addressing	Software configurable	1 ÷ 127 (CANopen); 1- 255 (TMLCAN)			-
Voltage, CAN-Hi or CAN-Lo to GND		-58		58	V
ESD protection	Human body model	±15			kV
Supply Output (+5V)		**Min.**	**Typ.**	**Max.**	**Units**
Output voltage	Current sourced = 250mA	4.8	5	5.2	V
Output current		250	300		mA
Short-circuit		Yes / Drive resets at event			
Over-voltage		NOT protected			
ESD protection	Human body model	±1			kV

† Stresses beyond values listed under "absolute maximum ratings" may cause permanent damage to the device. Exposure to absolute-maximum-rated conditions for extended periods may affect device reliability.

[1] "FS" stands for "Full Scale"

[2] For full RS-422 compliance, 120Ω termination resistors must be connected across the differential pairs, as close as possible to the drive input pins.

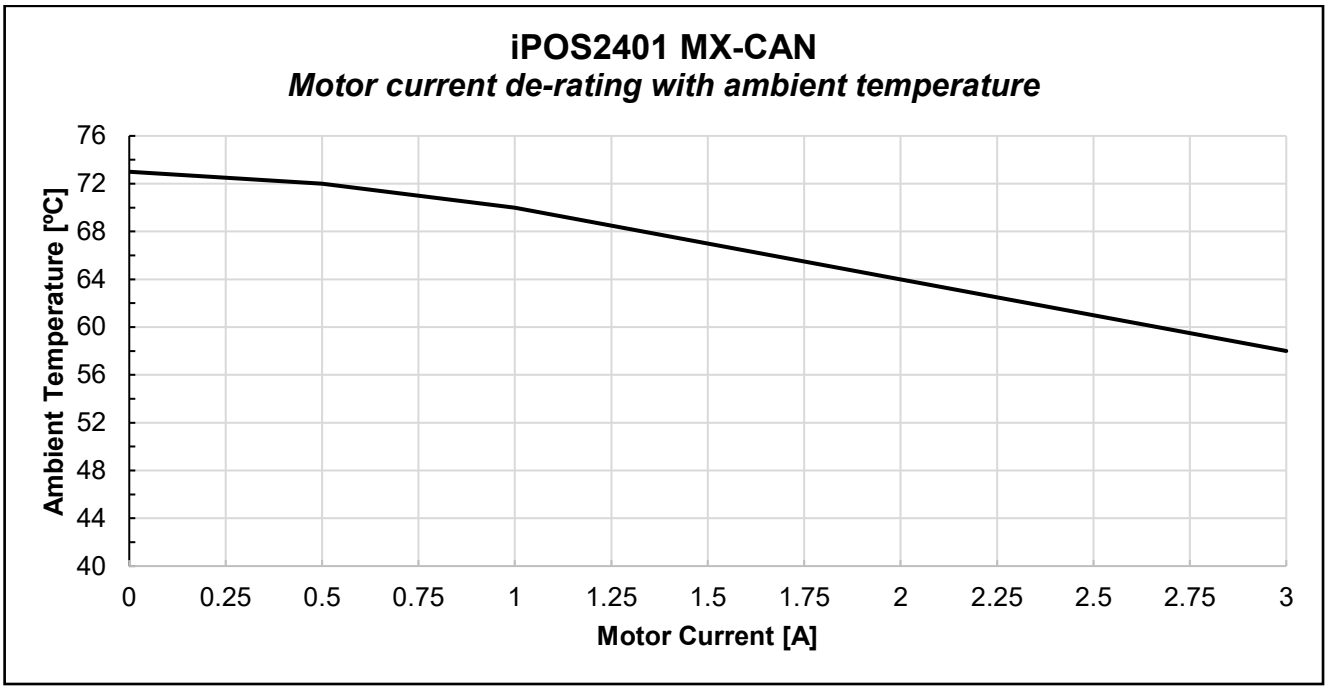
iPOS2401 MX-CAN
Motor current de-rating with ambient temperature
Ambient Temperature [ºC]
76
72
68
64
60
56
52
48
44
40
0
0.25
0.5
0.75
1
1.25
1.5
1.75
2
2.25
2.5
2.75
3
Motor Current [A]